A Resource for the State of Florida

HURRICANE LOSS REDUCTION
FOR
HOUSING IN FLORIDA:

Section 5

PERFORMANCE OF TILE ROOFS

UNDER

HURRICANE IMPACT

A Research Project Funded by

The State of Florida Department of Community Affairs
Through Contract # 06RC-A%-13-00-05-261

Prepared by:

Amir Mirmiran, PhD
Professor & Chair of Civil and Environmental Engineering
Florida International University

In Partnership with:
The International Hurricane Research Center
Florida International University

TABLE OF CONTENTS

LIST OF APPENDICES

LIST OF FIGURES

LIST OF TABLES

EXECUTIVE SUMMARY

In the last two years, the State of Florida has been impacted by an unprecedented number of hurricanes. While many would remember the devastating impact of Hurricane Katrina in New Orleans, its damage in South Florida was not insignificant. Similarly, Hurricane Wilma has affected many in Miami-Dade and Broward counties to the extent that they are still recovering from the inflicted damages. Particularly for a Category 1 hurricane, Wilma has challenged the building codes in South Florida as they relate to roof covering. While most homes suffered little structural damage, many experienced roof covering failures, and especially lost a large number of tiles.

The main issues at hand are; (a) whether there is a significant difference in performance of clay tiles and concrete tiles and, if so, why, (b) whether the current building codes provide adequate and reasonable measures for proper performance of tile roofs, and (c) what, if any, change is necessary to improve the way tile roofs are installed.

A detailed experimental and analytical study was carried out for ridge clay and concrete tiles with adhesive-set, mortar-set, as well as mechanical attachments. The strongest system appeared to be concrete tiles with mortar. While concrete tiles bond to mortar much better than clay tiles, clay tiles adhere better to the foam. Concrete tiles also perform better than clay tiles when mechanical fasteners are used with an embedment length of at least 1”. Therefore, the present study does not support recent efforts by the industry to completely ban the use of mortar for all attachments of hip and ridge tiles. However, it is suggested that any such ban on mortar be limited to clay tiles only.

It is important to note that the above findings are preliminary, as this phase was limited to single tile tests for hip and ridge tiles. It is therefore, necessary to extend this study to include testing of a larger section of the roof with field tiles made of clay or concrete. Also, dynamic cyclic loading of tiles can better simulate the effects of hurricane wind forces. This may also be achieved through wind tunnel or wall-of-wind tests of clay and concrete tile systems.

PERFORMANCE OF TILE ROOFS UNDER HURRICANE IMPACT

1.0 Introduction

1.1 Statement of the Problem

Almost a year after the impact of Hurricane Wilma on October 24, 2005, a large percentage of homes that sustained roof covering damages in Miami-Dade and Broward counties remain un-repaired due, in part, to the high demand for roof contractors. At the onset of what is expected to be another active hurricane season with 12 to 15 tropical storms as predicted by the National Oceanic and Atmospheric Administration (NOAA), these homes are very vulnerable to damages resulting from not only water leakages, but also from wind intrusion that could result in further damage to the already weakened roof tiles, or in more critical cases, structural failures.

During the last two hurricane seasons, the State of Florida has been impacted by an unprecedented number of hurricanes. While many would remember the devastating impact of Hurricane Katrina in New Orleans, its damage in South Florida was not insignificant. Similarly, Hurricane Wilma affected many in Miami-Dade and Broward counties. It challenged building codes in South Florida as they relate to roof covering, especially due to the fact that it was only a Category 1 storm. A December 5, 2005 article in the Miami Herald sums up the tile roof problem, as follows:

> "Where Wilma's winds hit hardest, barrel-tile roofs that Broward and Miami-Dade codes said should have withstood 140-mph winds often lost tiles…and as odd as it seems, it is easier to get a whole new roof than a minor repair right now."
>
> "Hit especially hard were "eave" tiles on the outer edges of roofs and "hip" tiles running along the ridges."
>
> "There is currently lobbying efforts by the code enforcers in Miami-Dade and Broward counties to ban the inadequate mortar often used to secure roof tiles, and have them attached by nails, screws and such better attachment methods as adhesive systems (foam), according to Carroll, the Broward code enforcer."

The main issues studied as part of this research project are: (1) whether there is a significant difference in the performance of clay and concrete tiles and why; (2) whether the current building codes and installation procedures provide adequate and reasonable measures for proper performance of tile roofs; and (3) what, if any, change is necessary to improve the installation of tile roofs. It is the intent of this project to benefit the State of Florida by identifying sources of problems in one of the most common damage areas that Floridians face every hurricane season, i.e., loss of roof tiles.

1.2 Research Objectives

The following research objectives were established to address the above stated problems:

- Identification and assessment of current practices and building code regulations for tile roof installation;
- Evaluation of the performance of concrete and clay tile roofs and identification of any difference in their performances ; and
- Recommendation of simple and inexpensive improvements to the current installation procedures.

1.3 Research Methodology

1.3.1 Survey of Literature and Practice

An extensive survey was carried out to identify the current practice and building code requirements for the various roof covering attachment systems. The review section also covers investigations by the roof tile industry and different government agencies on the performance of tile roofs under the impact of recent hurricanes. Special attention was paid to the various bonding agents, especially mortar-set systems. Of great value to our research was our interaction with the Florida Roofing, Sheet Metal and Air Conditioning Contractors Association (FRSA), Roofing Industry Committee on Weather issues (RICOWI), Federal Emergency Management Agency (FEMA), building officials in Miami-Dade County as well as a number of manufacturers, such as Monier Life Tile, Santa Fe Tile and Polyfoam Products, Inc. Also, equally valuable were our site visits to damaged buildings in Miami-Dade county and interviews with local roofers.

1.3.2 Performance Assessment of Tile Roofs with Modeling and Unit-Size Testing

Based on the information collected through the survey of existing literature, valuable data on the interaction of clay and concrete hip and ridge tiles with three different attachment systems was obtained through laboratory testing. Two types of tests were carried out, as follows:

- Water absorption tests for clay and concrete tiles to determine if there is any substantial difference between the two; and

- Static uplift resistance tests for a single tile assembly consisting of one clay or concrete tile and the various bonding agents; i.e., mortar-set, mechanical fasteners and adhesive-set.

Test data was then fed into a simple, yet accurate Finite Element Model (FEM) of a ridge

roof tile. The FEM provided a tool for future analysis of the entire roof system.

1.3.3 Guidelines and Recommendations

Guidelines and recommendations are presented in order to improve resistance of tile roofs in Florida. These recommendations affect current practices as well as current building code requirements. They also include suggestions for future research.

1.4 Organization of the Report

This report is divided into five sections: (1) Introduction, (2) Literature Review, (3) Laboratory Testing, (4) Finite Element Model, and (5) Conclusions. Section 1, this section, presents the problem statement, objectives and methodology. Section 2 presents an extensive review of post-hurricane assessment reports, codes and regulations. Section 3 is devoted to the test results of concrete and clay tiles for their physical properties and static uplift resistance. Section 4 illustrates the results of a finite element analysis of a single tile subject to an upward force. Conclusions and recommendations are presented in Section 5. Supporting data, acronyms, useful terminology and photographs of the tests and field reconnaissance are included in Appendices A through H.

2.0 Literature Review

2.1 Basic Roof Covering Information

2.1.1 Zones of a Roof

In general, there are five defined exposure zones on a roof; Corner, Field, Hip, Perimeter, and Ridge (See Figure 2.1). It is a standard practice to install tiles located on the corner, perimeter and field zones using the attachment methods designed for the corner zone. This is very conservative because tiles in this area of the roof experience greater uplift forces than those in the field and perimeter zones.

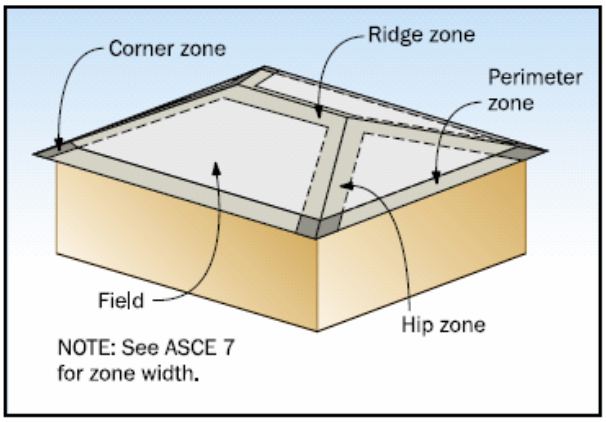

Figure 2.1: Zones of a Roof

[Reproduced from FEMA's Recovery Advisory No.3]

2.1.2 Attachment Methods

There are currently three different attachment methods used in Florida for concrete and clay tiles: mechanical, adhesive-set and mortar-set.

Mechanically attached systems can use either nails or screw fasteners and must follow installation procedures in accordance with the Florida Building Code as well as the *Concrete and Clay Roof Installation Manual*. One screw or nail is used to attach each tile in addition to an adhesive agent at the tile overlaps. Nails and screw fasteners must have corrosion resistance feature that meets the American Society for Testing and Materials (ASTM) A641 requirements and must penetrate the deck or batten at least 3/4". The *Concrete and Clay Roof Installation Manual*, which is published jointly by the FRSA and the Tile Roofing Institute (TRI), provides uplift resistance for mechanically attached systems. Factors that affect the tabulated uplift resistance include: use of battens, type of decking and type of screw or nail. As the profile of the roof increases (flat/low, medium or high), so does the required number of fasteners and the tabulated uplift resistance. Battens reduce the resistance in some cases, as compared to the other alternative, i.e., direct attachment to the deck.

Adhesive-set is a fairly new system developed in response to a widespread failure of tiles attached using the mortar-set systems under the impact of Hurricane Andrew. For the uplift resistance of adhesive-set systems, the *Concrete and Clay Roof Installation Manual*

recommends the use of manufacturer's suggested values. Adhesive products must possess density, compressive strength and tensile strength conforming to ASTM D 1622, D 1621 and D 1623, respectively.

Mortar consists of cement conforming to ASTM C 91 Type M, sands conforming to ASTM C 144, and other lightweight aggregates meeting ASTM C 332 requirements. The mortar used to install field tiles must be pre-mixed and bagged, and must have a Florida Building Code product approval. For the uplift resistance of mortar-set systems, the *Concrete and Clay Roof Installation Manual* recommends the use of manufacturer's suggested values.

2.1.3 Tile Profile and Properties

As seen in Figure 2.2, tile profiles vary from flat to low and high with no significant difference between clay and concrete tiles. The following differences were observed in regards to the general appearances of concrete and clay tiles:

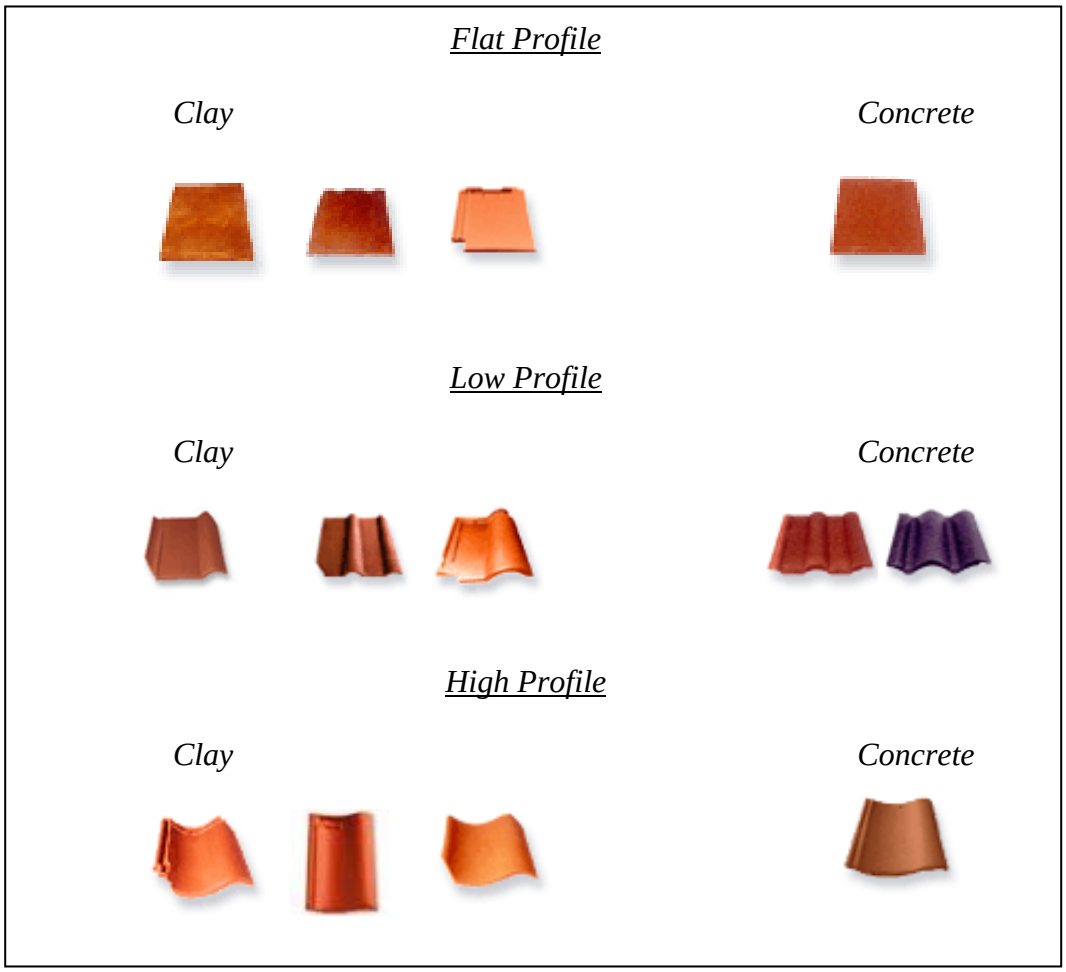

Figure 2.2: Different Tile Profiles

- To the plain eye, clay tiles look more fragile than concrete tiles;
- Concrete tiles are generally thicker and heavier than clay tiles;
- Concrete tiles appear to have more air voids and a larger water absorption rate than clay tiles; and
- Surface of concrete tiles is much rougher than that of clay tiles, a feature that should help increase the bond between the tile and either the mortar-set or the adhesive-set being used to install the tiles.

2.1.4 Tile Market Composition

Concrete is the most commonly used roof covering material being installed presently in new constructions in South Florida. Properties of concrete tiles that make them the material of choice over shingles and clay tiles include aesthetics and cost. When it comes to choosing between concrete and clay, the main factor driving the costumer's decision is cost. The average price of clay tiles is about $10 dollars per square foot, while concrete is about 25% less expensive. These prices reflect the supply side economics as a result of the larger number of concrete tile plants in Florida.

2.2 Codes and Regulations

Building construction in Florida is regulated by the Florida Building Code, the current (2004) edition of which is based on the 2003 edition of the International Building Code (IBC). After the unified building code became effective in March 2002, all municipalities abandoned their local codes (e.g., South Florida Building Code in Miami-Dade and Broward counties) and adopted the FBC. The Florida Building Code identifies four wind zones that require more stringent design specifications, as follows:

1. Special Protection Zone
2. High Velocity Hurricane Zone
3. Wind-Borne Debris Region
4. Panhandle Protection Provision Zone

Of special interest for the scope of this research project is Zone 2, High Velocity Hurricane Zone (HVHZ), which regulates building construction in Miami-Dade and Broward counties. The installation of clay and concrete tiles is regulated by Section 1507.3 of the FBC and shall comply with recommendations of the Florida Roofing, Sheet Metal and Air Conditioning Contractors Association (FRSA) and the Tile Roofing Institute (TRI). Guidelines for the installation of concrete and clay tiles are provided in the *Concrete and Clay Roof Tile Installation Manual*.

Testing procedures in the High Velocity Hurricane Zones are provided in Section 1523 of the FBC. This section defines minimum testing requirements for roofing components,

and requires that all roofing products be tested for their physical properties, water infiltration, and uplift resistance.

Miami-Dade County requires that all building products and components being considered for installation within its jurisdiction be approved by the county's Product Control Division prior to their use. Concrete and clay tiles, as well as their attachment components, require a Notice of Acceptance (NOA) issued by the Product Control Division to ensure their compliance with the building code. In their approval process, the Product Control Division requests the following test results:

Physical Properties:	Test Standard
Clay	ASTM C 1167
Concrete	TAS 112
System Performance Standard (Tile Attachment)	
Mechanical Attachment	TAS 100
Mortar or Adhesive	TAS 101
Mechanical Attachment without Clip	TAS 102
Optional Tests	
Air Permeability Test	TAS 116
Wind Characteristics	TAS 108

2.3 Review of Post-Hurricane Assessment Teams Reports

After each hurricane that impacted the state during the 2004 and 2005 hurricane seasons, the tile industry deployed teams to assess tile roof damages and to identify any eminent pattern that may have been present. The following assessments were consistently made by different teams deployed by the tile industry to the impacted areas:

- Tile roofs attached using mortar-set systems sustained more damage than those using foam-set or mechanically fastened systems.

- Improper installation was found to be a critical contributing cause to the damages, especially in adhesive-set systems. According to Mr. Steve Munnell, Executive Director of FRSA, teams found out that sometimes either the size of the foam paddy was insufficient or the foam was not allowed to adequately cure before placing the tiles.

- Widespread problems were noted with the hip and ridge tiles, especially for those using only mortar-set, in which, according to Mr. Munnell, most often an insufficient amount of mortar was placed.

Figure 2.3 and Figure 2.4 show typical clay ridge tile failure and improper concrete tile installations, respectively.

Figure 2.3: Typical Clay Ridge Tile Failure

Figure 2.4: Improper Concrete Tile Installation

In addition, FEMA deployed Mitigation Assessment Teams (MAT) to evaluate the damages and to document observations, recommendations and conclusions in reports that were published shortly after every storm. Other than the report for Hurricane Wilma, which has not been published by FEMA as of yet, the research team had access to the following MAT reports:

- Hurricane Ivan in Alabama and Florida;
- Hurricane Charley in Florida; and
- Summary Report on Building Performance: 2004 Hurricane Season.

These MAT reports concluded that current static test methods used to evaluate tile performance may over-estimate the actual resistance of tiles, as they neglect the dynamic load impact of a hurricane. In addition, these MAT reports included the following recommendations:

- Re-evaluation by the foam-set manufacturers of their installation procedures in order to simplify and clarify the requirements;

- Re-evaluation by the foam-set manufacturers of their training and certification programs;

- Variation in size and placement of foam paddies, and the need for their quality control;

- Requiring wood metal or ridge board for hip and ridge tile installation;

- Requiring FBC approved pre-bagged mortar for hip and ridge tile attachments; and

- Prohibiting any component substitution without proper laboratory testing and prior FBC product approval.

In a March 2006 report titled *Hurricanes Charley and Ivan Wind Investigation*, published by Roofing Industry Committee on Weather Issues (RICOWI), the following conclusions were made:

- Mortar-set attachments and hip and ridge tiles sustained major damages. Even some of the tiles that remained in place were found to have been weakened or disconnected.

- Several workmanship defects were found in the installations, for example, mortar layer was thin and sometimes did not come in contact with the tile, or often inadequate adhesives were applied under the tiles, or in a significant variance from the manufacturers' guidelines, adhesive was applied in straight lines.

2.4 Changes to the FBC

Last year, a coordination group was tasked with the identification and evaluation of research projects regarding building failures in the 2004 hurricane season. The group recommended the following changes to the FBC related to roof coverings (Ref): Hurricane Research Advisory Committee Report October 10, 2005

- Requiring a wood, metal or other structural support for tile attachment methods in the mechanically attached, mortar-set and adhesive-set systems;

- Requiring FBC approved pre-bagged mortar to attach hip and ridge tiles in mortar set systems;

- Requiring testing of ridge attachment systems to establish wind uplift resistance;

- Utilizing an additional tile factor of 2. One above that specified in Testing Application Standard (TAS) 101 to determine the allowable overturning moment;

- Prohibiting component substitution without proper laboratory testing and prior FBC product approval; and

- Allowing hip and ridge attachment systems with demonstrated performance equal or superior to that required by the identified systems.

Widespread hurricane damage to hip and ridge tiles resulted in the development of an intensive set of guidelines for hip and ridge tile installation, which was adopted into the FBC and incorporated into the latest edition of the TRI/FRSA *Concrete and Clay Roof Tile Installation Manual* for Florida. These new protocols are covered in more detail in Appendix B.

3.0 Laboratory Testing

As indicated earlier, reports by the FEMA MATs and the teams deployed by the tile industry asserted that hip and ridge tiles were found to be very vulnerable to hurricane winds, and their failure results in the failure of adjacent field tiles. However no mention of any difference in the uplift resistance of concrete and clay tiles was found in the literature. In addition, none of the MAT reports attempted to distinguish between the performance of concrete and clay tiles during hurricanes. Therefore, the research team devoted this study in its entirety to the performance of hip and ridge tiles of clay or concrete and their installation procedures. Laboratory testing was aimed at determining uplift resistance for concrete and clay tiles using three different attachment methods. Two types of testing were performed in this study: water absorption and static uplift load tests.

Clay tiles used in the experiments were manufactured by SantaFe Tiles Corporation while concrete tiles were manufactured by Monier Life Tile. Field tiles were donated by Mediterranean Roof Tile, a local distributor, while hip and ridge tiles were donated by their respective manufacturers. Adhesive foam was donated and installed by Polyfoam Products, Inc.

3.1 Water Absorption Tests

The purpose of water absorption tests was to delineate any significant difference between concrete and clay tiles in absorbing water from the mortar, as this could potentially reduce the water content of the mortar, hindering its curing process, as well as its ultimate strength.

Water absorption tests were performed on five (5) clay and three (3) concrete tile samples in accordance with the ASTM C 67 and ASTM C 140 standards, respectively. All tiles were visually inspected and dried for 24 hours in a ventilated oven at 110° C; removed from the oven; and allowed to cool down for 4 hours. The dry weight of each tile (W_d) was measured and recorded. The specimens were then submerged in water for 24 hours. They were then removed from the water, wiped off and their immersed weight (W_i) was recorded. The dry and immersed weights were then used to calculate the density and water absorption of the tiles, as shown below in Table 3.1 and Table 3.2 for clay and concrete tiles, respectively.

Table 3.1: Absorption Rates and Dry Density for Clay Tiles

Clay	Tile Samples					Average
	1	2	3	4	5	
Absorption Rate	8.5 %	8.7 %	8.7 %	8.7 %	8.5 %	8.6 %
Density	130 lb/ft^3	132 lb/ft^3	133 lb/ft^3	130 lb/ft^3	129 lb/ft^3	131 lb/ft^3

Table 3.2: Absorption Rates and Dry Density for Concrete Tiles

Concrete	Tile Samples			Average
	1	2	3	
Absorption Rate	9.0 %	8.9 %	9.0 %	9.0 %
Density	125 lb/ft^3	124 lb/ft^3	124 lb/ft^3	124 lb/ft^3

3.2 Uplift Resistance Tests

These tests were performed in accordance with ASTM C 1568 which covers procedures to determine the mechanical uplift of concrete and clay roof tiles. For mortar-set and adhesive-set systems five (5) assemblies were tested, while for the mechanically attached system three (3) assemblies were tested.

3.2.1 Uplift Resistance of Tiles with Adhesive-Set

These tests were conducted in order to evaluate the uplift resistance of concrete and clay ridge tiles attached using adhesive-set systems. The tiles were attached with Polypro AH 160 roof tile adhesive to a 2”x 6” wood member that was mechanically attached to the roof deck, as shown in Figure 3.1. The average weight of the foam paddies was approximately 30 grams. The framing system consisted of a ½” plywood decking mounted on 2”x 4” rafters spaced 24”. on center. A ¼” diameter hole was drilled at the center of each tile, and a ¼” steel bolt was fastened to the tile to apply an upward force.

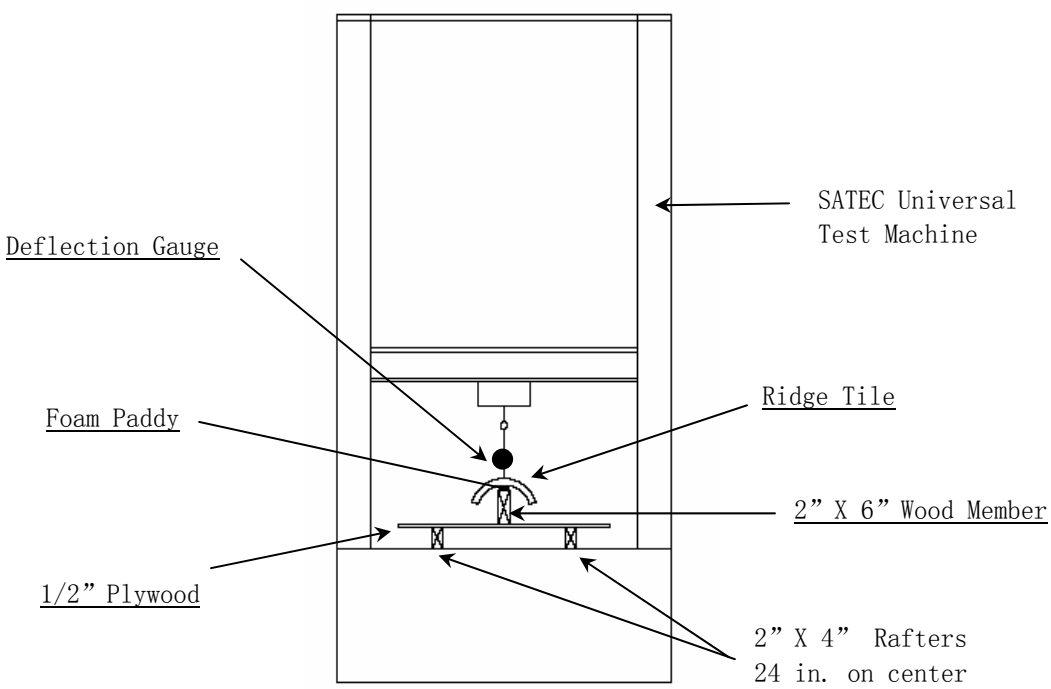

Figure 3.1: Testing Apparatus and Set -up for Adhesive-Set

Five (5) clay and five (5) concrete hip and ridge tiles were installed with adhesive-set, kept inside the lab at room temperature, and tested six days later. Following Polyfoam’s recommendations, the 2”x 6” wood members, to which the tiles were attached, were allowed to dry out for a few hours prior to the installation.

Table 3.3 and Table 3.4 summarize test results for adhesive-set with clay and concrete tiles, respectably. They indicate the failure load, deflection and percentage of foam that remained attached to tile for each of the tiles tested for concrete and clay respectively. The percentage was determined visually as a fraction of the original contact area. The failure load was taken as the load required to cause additional deflection without any further resistance.

Table 3.3: Test Results of Adhesive–Set with Clay Tiles

Clay Tile	Max. Load (lbs)	Deflection (inches)	Remaining Foam (%)
1	660	0.49	25
2	524	0.42	45
3	591	0.47	80
4	457	No Data	65
5	451	No Data	35
Average	537	0.46	

Table 3.4 Test Results of Adhesive-Set with Concrete Tiles

Concrete Tile	Max. Load (lbs)	Deflection (inches)	Remaining Foam (%)
1	No Data	No Data	3
2	230	No Data	3
3	303	0.35	3
4	262	0.15	3
5	426	0.37	25
Average	305	0.29	

Figure 3.2 shows the load-deflection response of the clay and concrete tile specimens with adhesive-set.

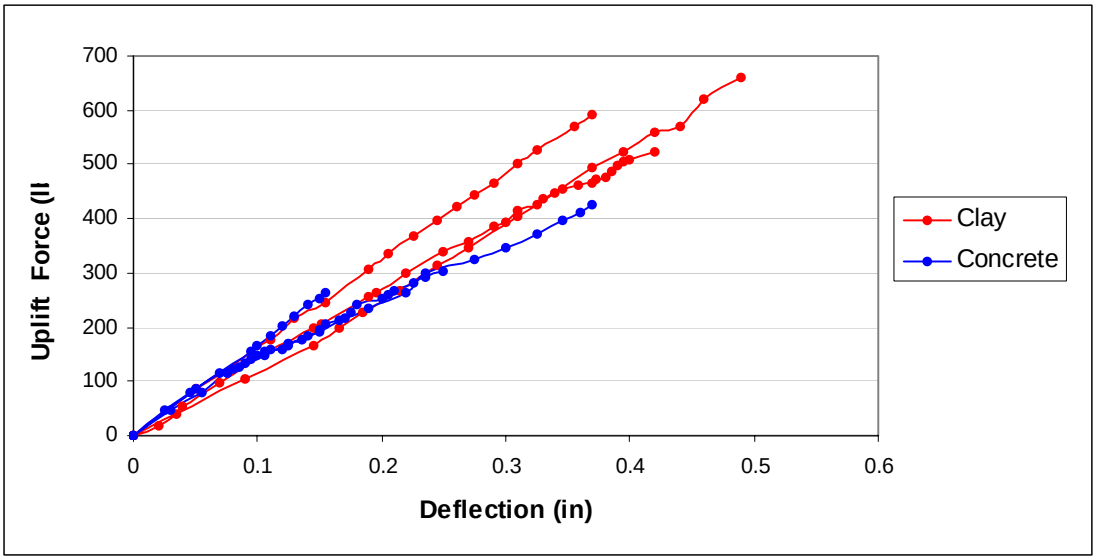

Figure 3.2: Load-Deflection Response for Adhesive-Set Systems

Figure 3.3: Typical Failure Surface of Adhesive-Set with Clay Tile

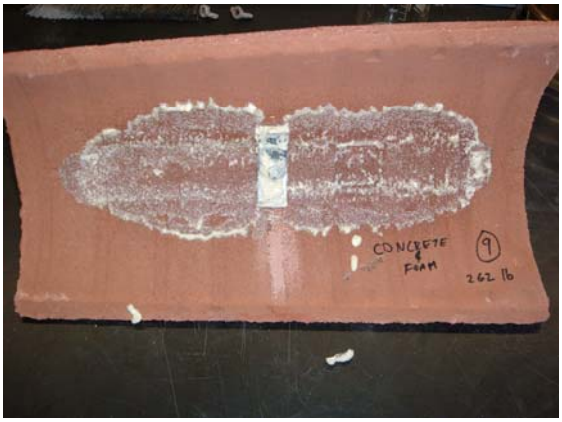

Figure 3.4: Typical Failure Surface of Adhesive-Set with Concrete Tile

Four possible failure modes were identified: (1) bonding failure at the interface between the tile and the foam (2) bonding failure at the interface between the 2” x 4” wood member and the foam, (3) failure within the foam paddy itself, and (4) bearing failure of the tile at the point of load application. Under the impact of hurricane winds, tiles are loaded dynamically and the load is distributed over the entire surface area of the tile. Therefore, a 2 ½” x 1” load transfer steel plate with a thickness of 3/8” was placed under the tile to increase the contact area of the applied force in order to avoid failure due to stress concentration.

Concrete tiles exhibited bonding failure at the interface between the tile and the adhesive foam. Figure 3.3 and Figure 3.4 show typical failure surfaces of adhesive-set with clay and concrete tiles, respectively. The figures clearly show that little or no foam remained bonded to concrete tiles after failure. The average uplift resistance for concrete tiles was found to be 305 lbs. Clay tiles, on the other hand, exhibited some failure at the interface between the tile and the foam and some at the interface between the 2” x 6” member and the foam. The average uplift resistance was 537 lbs, almost twice that of concrete tiles. The higher uplift resistance and the exhibited failure mode constitute irrefutable evidence that the foam adheres better to clay tiles than to concrete tiles.

3.2.2 Uplift Resistance of Tiles with Mortar-Set

These tests were performed in order to evaluate the uplift resistance of concrete and clay ridge tiles attached using mortar-set. Figure 3.5 shows the test set up for mortar–set specimens. Two field tiles were mechanically attached to the ½” plywood deck, and one ridge tile was later attached to the field tiles using mortar set. The deck was mounted on 2”x 4” rafters spaced 24” on center. Prior to their installations, a ¼” diameter hole was drilled at the center of each tile, and a ¼” steel bolt was fastened to a load transfer device consisting of a 1” wide steel plate placed longitudinally under the tile. The tile was later pulled from this bolt.

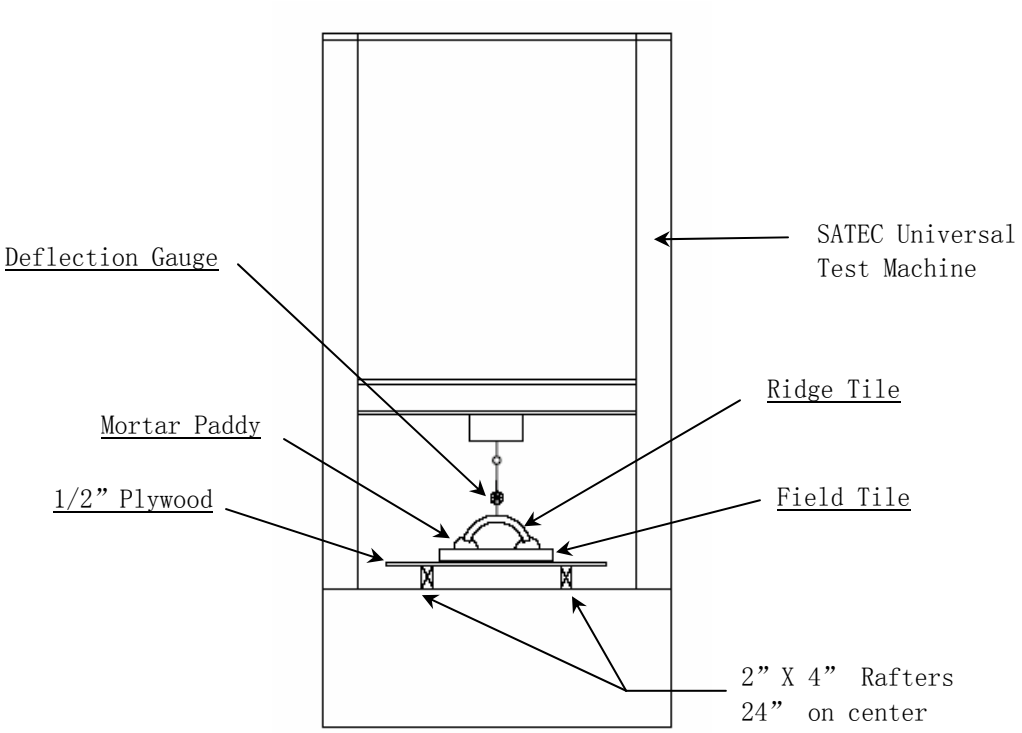

Figure 3.5: Test Apparatus and Set-Up for Mortar-Set

Similar to the adhesive-set specimens, four possible failure modes were identified: (1) bonding failure at the interface between the ridge tile and the mortar (2) bonding failure at the interface between the field tiles and the mortar, (3) failure within the mortar, and (4) bearing failure of the tile at the point of load application. Table 3.5 and Table 3.6: summarize test results for mortar-set with clay and concrete tiles, respectively. Also, Figure 3.7 and Figure 3.8 show typical failure modes of mortar-set with clay and concrete tiles, respectively. The failure load was taken as the load required to cause additional deflection without any further resistance. Concrete tiles exhibited failure by breakage at the point of load application despite the placement of a load transfer plate, and were much more resistant to the uplift forces than the clay tiles. The average uplift resistance for concrete tiles was found to be 848 lbs. Clay tiles, on the other hand, exhibited bonding failure at the interface between the field tiles and the mortar. The average uplift resistance was only 178 lbs, approximately 20% of that of concrete tiles. . The higher uplift resistance and the exhibited failure mode constitute irrefutable evidence that the mortar adheres better to concrete tiles than to clay tiles.

Figure 3.6 shows the load-deflection response of clay and concrete tiles with mortar-set.

Table 3.5: Test Results of Mortar-Set with Clay Tiles

Clay Tile	Max. Load (lbs)	Deflection (inches)	Failure Mode
1	152	0.08	Debonding of mortar at ridge tile
2	177	0.11	Debonding of mortar at ridge tile
3	204	0.19	Debonding of mortar at ridge tile
4	140	0.06	Debonding of mortar at ridge tile
5	218	0.16	Debonding of mortar at ridge tile
Average	178	0.12	

Table 3.6: Test Results of Mortar-Set with Concrete Tiles

Concrete Tile	Max. Load (lbs)	Deflection (inches)	Failure Mode
1	885	0.32	Tile breakage at load point
2	859	0.36	Tile breakage at load point
3	820	0.19	Tile breakage at load point
4	919	0.27	Tile breakage at load point
5	759	0.15	Tile breakage at load point
Average	848	0.26	

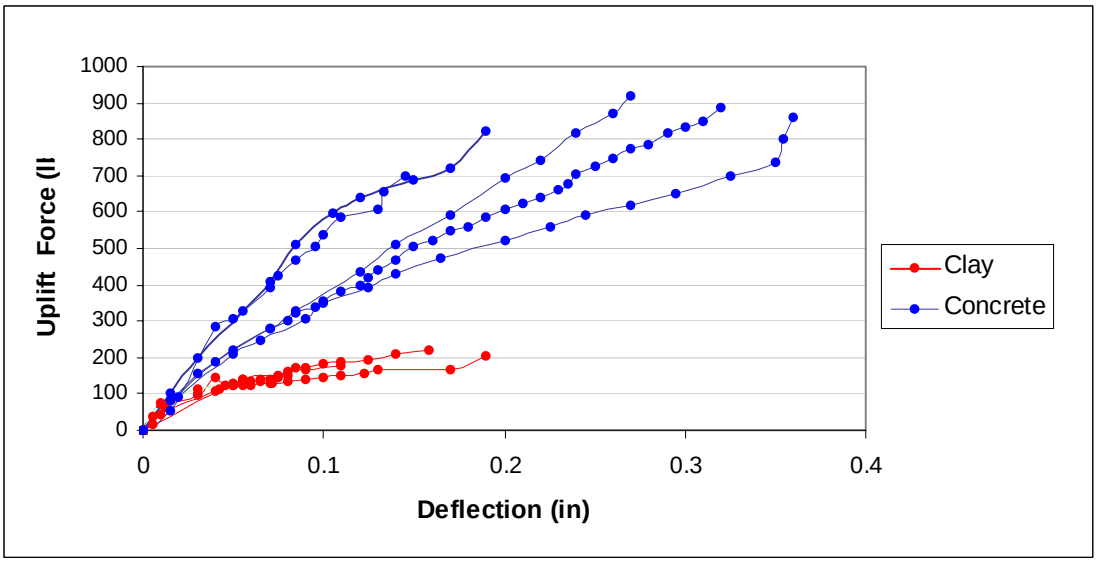

Figure 3.6: Load-Deflection Response for Mortar-Set Systems

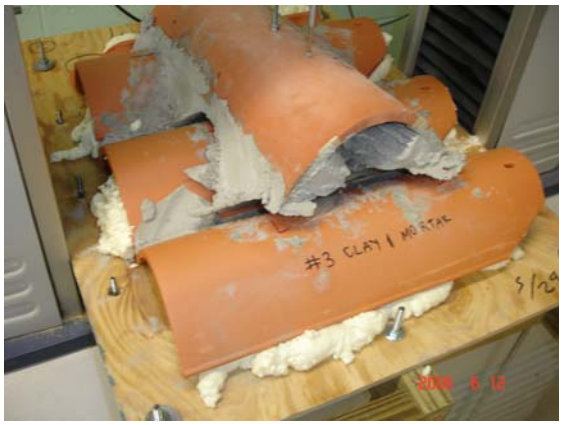

Figure 3.7: Typical Failure Mode of Mortar-Set with Clay Tiles

Figure 3.8: Typical Failure Mode of Mortar-Set with Concrete Tiles

3.2.3 Uplift Resistance of Mechanically Attached Tiles

Even though mechanically attached systems use either foam or mortar as a water blocking mechanism along the longitudinal edge of the tiles, the purpose of these experiments was limited to evaluating only the resistance provided by the nail or screw. Three (3) clay and three (3) concrete tiles were fastened to a 2”x 4” structural frame that was attached to a ½ “ plywood decking mounted on 2” x 4” rafters spaced 24” on center. Tiles were fastened with 2 ½” long screws; barely satisfying the minimum embedment requirement of ¾” for concrete tile assembly and embedding one full inch for the thinner clay tile assembly. A ¼” diameter hole was drilled at the center of each tile, and a ¼” steel bolt was fastened to the tile in order to apply an upward force, as shown in Figure 3.9.

Two possible failure modes were identified: (1) the nail or screw pulling out of the decking or structural support, and (2) tile breakage at the contact point with the head of nail or screw. Figure 3.10 and Figure 3.11 show failure modes of mechanically attached clay and concrete tiles, respectively. The two figures indicate the difference in the failure mode of the two types of tiles. While clay tiles broke at their fastened ends, concrete tiles generally failed by screw pull-out.

Figure 3.9: Set-up for Mechanically Attached Tiles

Figure 3.10: Failure Mode of Clay Tile Assembly

Figure 3.11: Failure Mode of Concrete Tile Assembly

Table 3.7: Test Results of Mechanically Attached Clay Tiles with 1" Embedment

Clay Tile	Load (lb)	Failure Mode
1	82	Tile breakage at fastened end
2	86	Tile breakage at fastened end
3	85	Tile breakage at fastened end
Ave.	85	

Test results for concrete and clay assemblies are shown in Table 3.7 and Table 3.8, respectively. As seen in the tables, uplift resistance for both assemblies was very similar; however, the failure mode exhibited was different, as discussed above. Once this phenomenon was observed, the two undamaged concrete tiles were tested with a longer screw that allowed for a full 1" embedment in the wood. As shown in Table 3.9, the

larger embedment changed the mode of failure to tile breakage, which occurred at about a 26 % higher force than clay tiles.

Table 3.8: Test Results of Mechanically Attached Concrete Tiles with ¾" Embedment

Concrete Tile	Load (lb)	Failure Mode
1	81	Tile breakage at fastened end
2	80	Screw pull- out of wood
3	89	Screw pull- out of wood
Ave.	84	

Table 3.9: Test Results of Mechanically Attached Concrete Tiles with 1" Embedment

Concrete Tile	Load (lb)	Failure Mode
-	-	-
Repeat 2	100	Tile breakage at load point
Repeat 3	112	Tile breakage at load point
Ave.	106	

It was concluded that when the minimum nail or screw embedment of ¾" is provided, the two attachment methods are likely to provide similar static uplift resistance of approximately 84 lbs. The failure mode, however, show that concrete tiles are stronger Therefore, while no additional resistance would be gained by increasing the embedment in clay tile assemblies, a higher resistance can be achieved in concrete, if the minimum embedment requirement is exceeded.

4.0 Finite Element Model

The data obtained through laboratory testing was fed into a simple, yet accurate, finite element model consisting of a single concrete or clay ridge tile. The tile was modeled in *SAP 2000* as a 3D shell element with a mesh carefully constructed to simulate the real case as depicted in Figure 4.1. The mesh consisted of 20 equal spaces in the longitudinal direction and 13 equal spaces in the transverse direction. All elements were restrained along the longitudinal (Global X) axis. Vertical dimensions measured at the tile ends were used to estimate the vertical component of the remaining intermediate nodes by means of a linear interpolation. The mesh was later refined along the longitudinal edges and the centerline, where the support springs and the loads were later applied. The entire model consisted of approximately 462 joints and 420 shell elements.

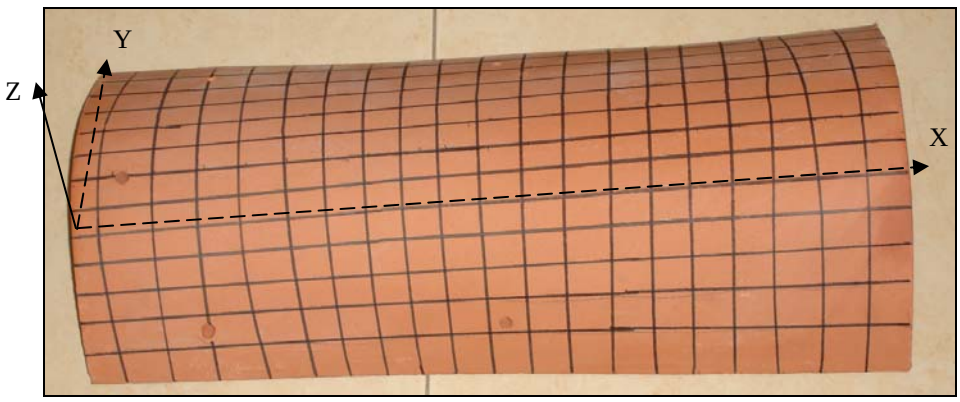

Figure 4.1: Plan View of Ridge Tile

Figure 4.2 and Figure 4.3 show schematics of equivalent spring supports for the adhesive-set and mortar-set, respectively. The spring constants for each combination of clay or concrete tile and adhesive foam or mortar were determined from the measured load-deflection responses of the tile systems as shown earlier in Figure 3.2 and Figure 3.6. Table 4.1 shows the average spring constants for each case. It should be noted that test observations and separate finite element analysis of a fully restrained clay or concrete tile determined the deflection of the tiles to be negligible in comparison to that of the total assembly.

Table 4.1: Constants for Equivalent Spring Supports

	Adhesive-Set (Kip/in)	Mortar-Set (Kip/in)
Clay Tile	1.2	1.5
Concrete Tile	1.1	3.3

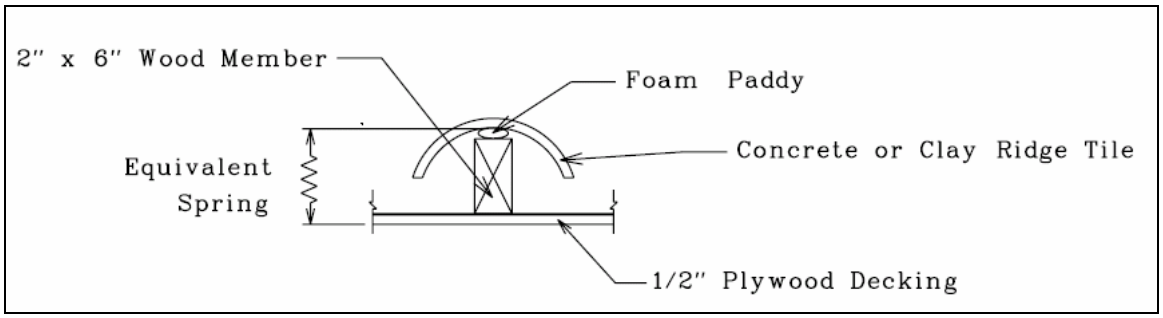

Figure 4.2: Schematics of Equivalent Spring Support for Adhesive-Set Systems

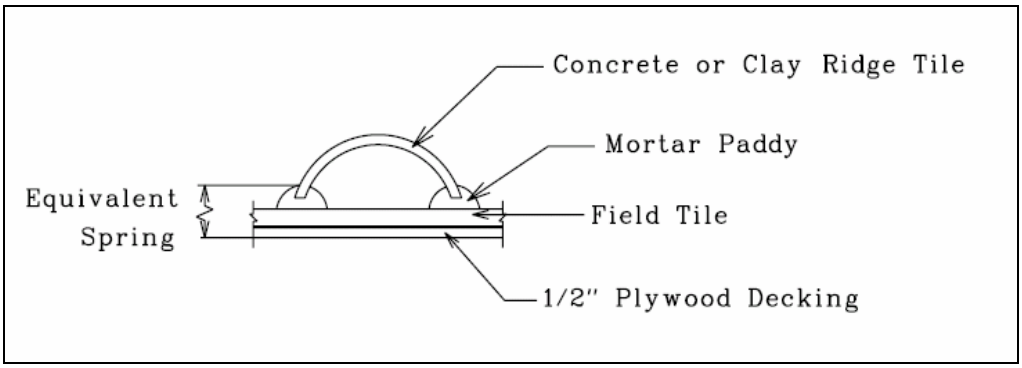

Figure 4.3: Schematics of Equivalent Spring Support for Mortar-Set Systems

Figure 4.4 and Figure 4.5 show the locations of the equivalent spring supports in the models for the adhesive-set and mortar-set, respectively. Also noted in the figure are the final mesh areas near the supports and along the centerline of the tile.

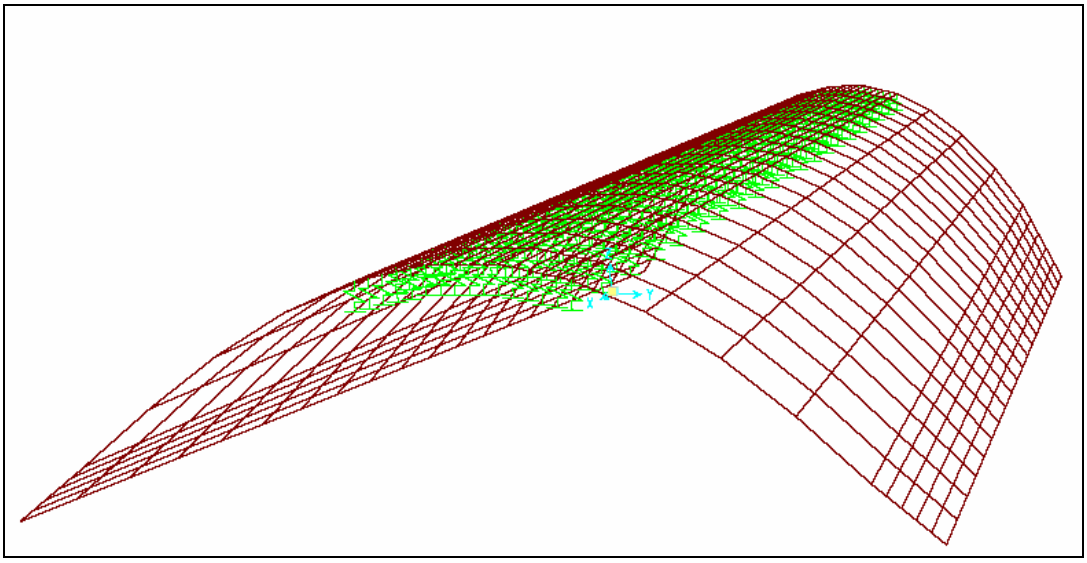

Figure 4.4: Springs for Adhesive-Set Systems

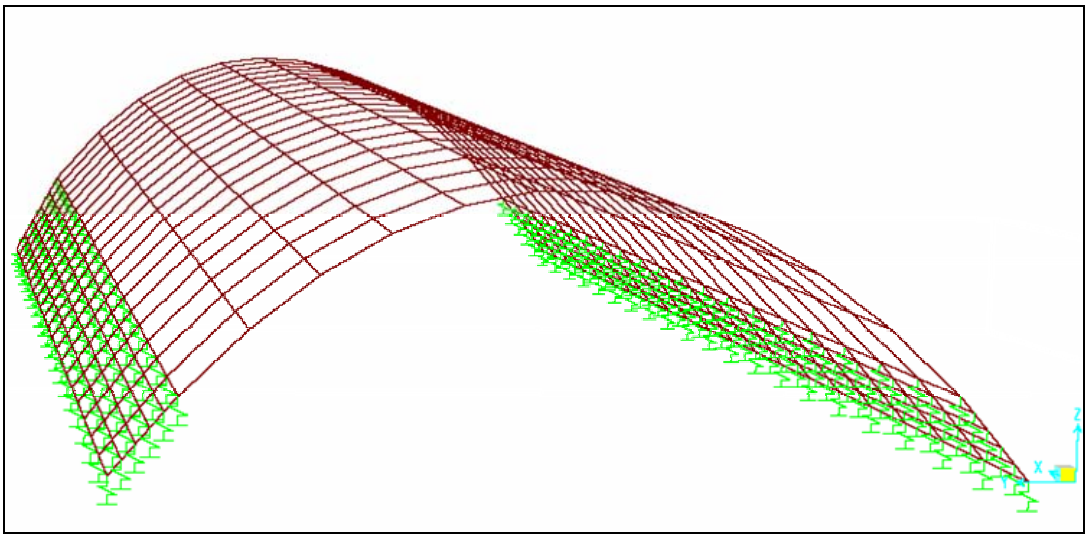

Figure 4.5: Springs for Mortar-Set Systems

The uplift loads were applied along the center line of the tile in the longitudinal direction, as shown in Figure 4.6. The magnitude of the load applied to the tile varied for each system to match the total uplift force obtained through laboratory testing.

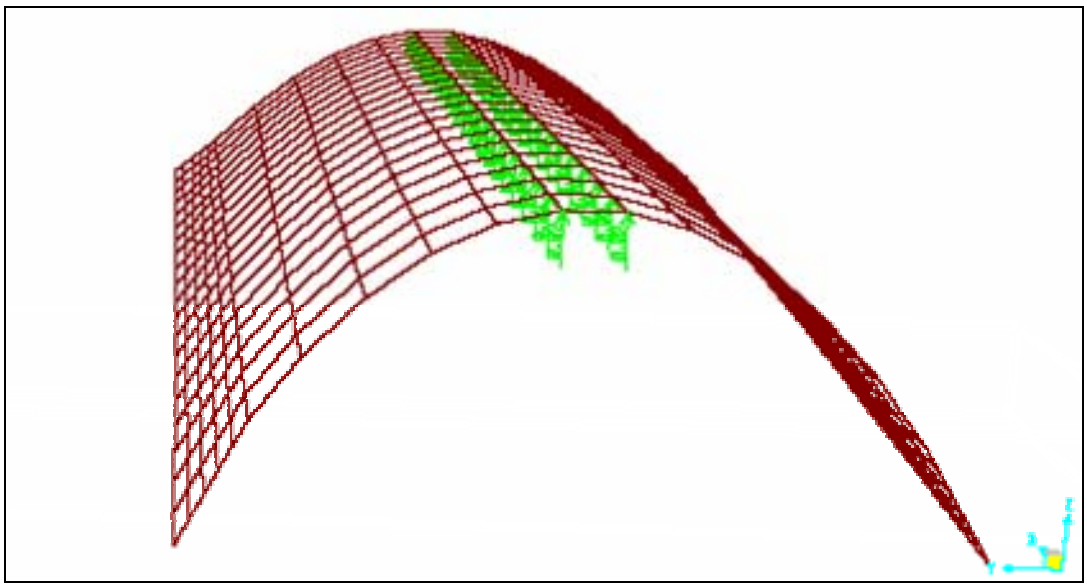

Figure 4.6: Uplift Loads on the Tile

Even though the actual magnitude of the displacement varied, the deflected shapes were quite similar for all systems, as shown in Figure 4.7 and Figure 4.8.

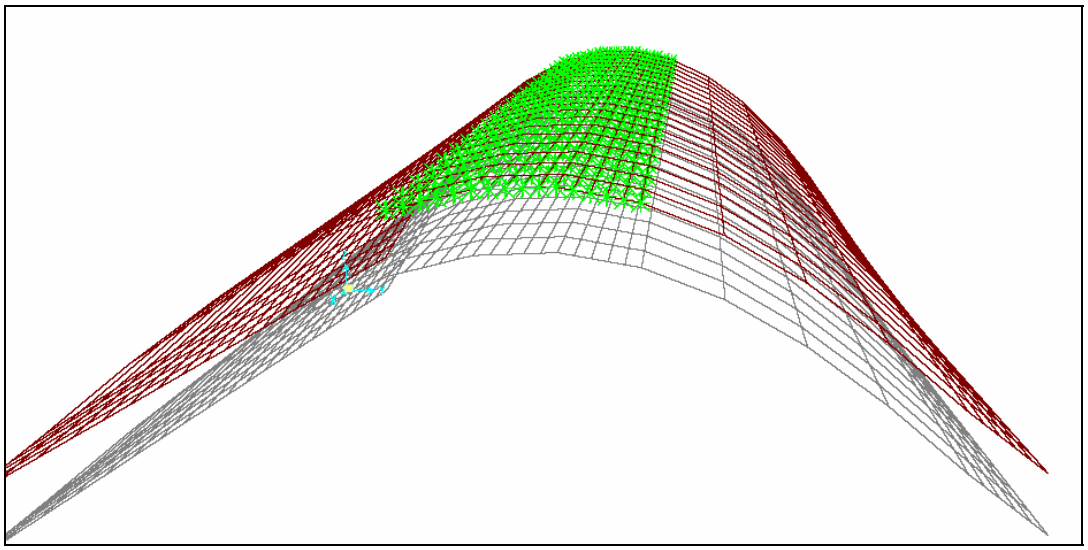

Figure 4.7: Deflected Shape for Adhesive-Set Systems

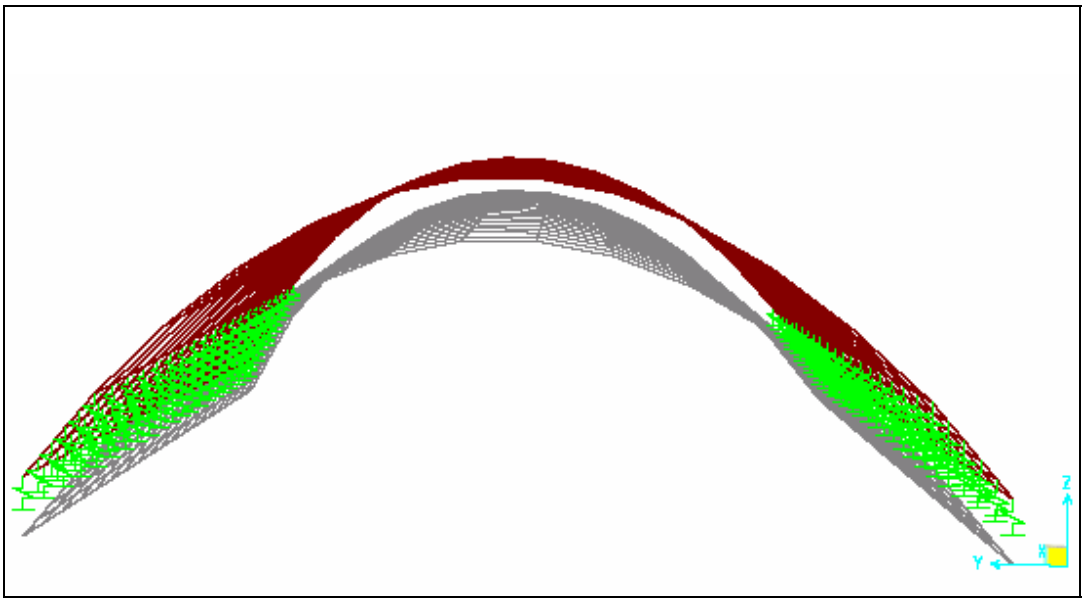

Figure 4.8: Deflected Shape for Mortar-Set Systems

Figure 4.9 shows the predicted load-deflection responses of the four systems. Although not shown in the same figure to avoid clutter, results from the finite element analysis were in close agreement with the measured responses.

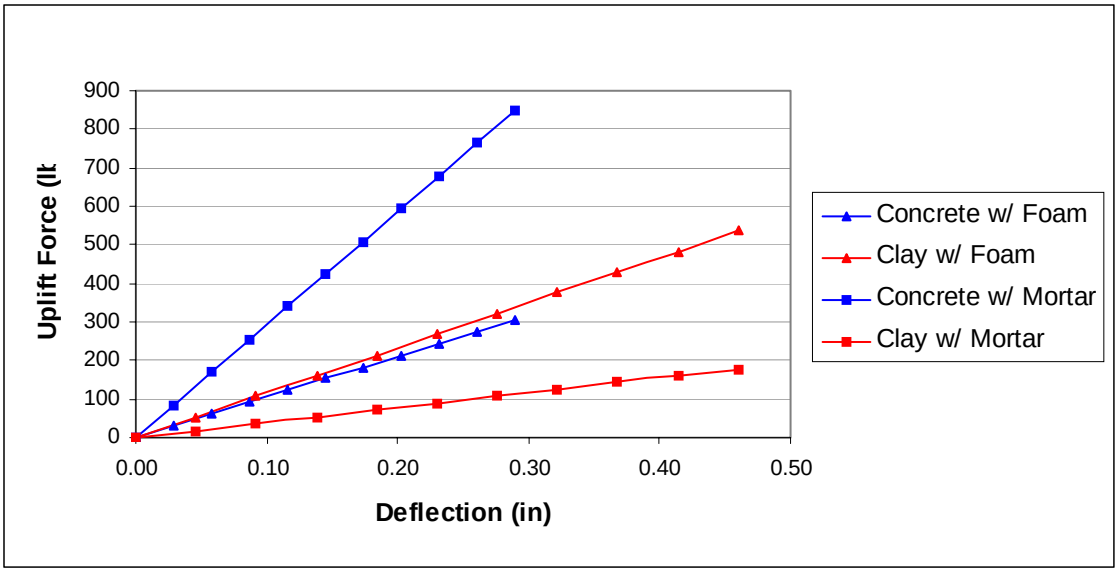

Figure 4.9: Predicted Load-Deflection Responses

5.0 Conclusions

A detailed experimental and analytical study was carried out for clay and concrete tiles with adhesive-set, mortar-set as well as mechanical attachments. The study is this first phase has resulted in the following preliminary conclusions:

- The bonding strength between the adhesive foam and both concrete and clay tiles was found to be adequate. Furthermore, bonding strength of clay tiles to adhesive foam was found to be significantly stronger than that of concrete tiles.

- Concrete tiles adhered significantly better to mortar than clay tiles.

- The system that was found to provide the highest resistance to static uplift forces was concrete tiles attached with mortar.

- With the minimum embedment of mechanical fasteners, i.e. ¾", clay and concrete tiles performed similar to each other. However, with 1" embedment, concrete tiles provide about 26 % higher strength than clay tiles.

Our test results do not support recent efforts in the industry to completely ban the use of mortar to attach hip and ridge tiles. Based on the previously stated results, our recommendation would be to ban the installation of clay hip and ridge tiles with mortar-set.

The above conclusions do not support recent efforts by the industry to completely ban the use of mortar for all attachments of hip and ridge tiles. The present study suggests limiting the ban of mortar-set to only clay tiles.

It should be noted here that the above conclusions are preliminary, as this phase of the study was limited to single tile tests for hip and ridge tiles. In order to validate these findings, further investigation is needed, as speculated by the Research Team, for Phase 2 of this study. The following recommendations are made:

- Testing of a larger section of the roof with field tiles;

- Projectile tests to compare resistance of clay and concrete tiles;

- Dynamic cyclic loading of the tiles to better simulate the effect of hurricane wind forces

- Investigation of field installation procedures to evaluate how closely the "roofers" follow the standard techniques; and

- Wind tunnel or wall-of-wind tests of clay and concrete tile systems.

References

PUBLICATIONS

_____. *(ASTM) American Standard Testing Method for* Wind Resistance of Concrete and Clay tiles, 2005.

_____. *Florida Building Code 2004,* Florida Department of Community Affairs, Tallahassee, FL, 2005.

_____. *Hip and Ridge Installation Instructions,* FRSA/TRI "Concrete and Clay Roof Tile Installation Manual" Fourth Edition, August 3, 2005

_____. *Hurricanes Charley and Ivan Wind Investigation Report,* Roofing Industry Committee on Weather Issues, Inc (RICOWI, Inc.), March 2006.

_____. *Hurricane Damage to Residential Structures: Risk and Management.* The Johns Hopkins University. Baltimore, Maryland, November, 1996

_____. *Mitigation Assessment Team Report, Hurricane Charley in Florida,* Observations, Recommendations, and Technical Guidance, FEMA 488 / April 2005

_____. *Mitigation Assessment Team Report, Hurricane Charley in Florida,* Observations, Recommendations, and Technical Guidance, FEMA 489 / August 2005

_____. *Report to the Florida Building Commission,* Florida State University, October 10, 2005

_____. *Summary Report Building Performance,* 2004 Hurricane Season, FEMA 490 / March 2005

_____. *(TAS) Testing Application Standards 101 – 95,* Test Procedure for Static Uplift Resistance of Mortar or Adhesive Systems, 1995 - 1998

Analysis of proposed consent order to aid public comment; Monier Lifetime LLC-Analysis, March 1999.

Commission Proposes Florida Building Code Changes, Florida Homes Builders Association @ FHBA.com, May 2006.

Concrete and Clay Roof Tile Installation Guide, Fourth Edition, Florida Roofing, Sheet Metal and Air Conditioning Association, Winter Park, FL, and Tile Roofing Institute, Chicago, 2005.

FHBA/HBAMO Water Intrusion Study Recommendations; Florida Homes Builders Association @ FHBA.com, May 2006.

Florida Building Commission Approves Unified Building Code; Flsenate.gov; November 2000.

From the Florida Building Code Preface History; 2004 Florida Building Code Volume p/5601104; April 2006.

Hurricane Research Advisory Committee, Report to The Florida Building Commission, October 10, 2005

International Building Code, International Code Council Inc., Falls Church, VA, 2003.

Metal Building Systems Manual; Metal Building Manufacturers Association, Cleveland, OH, 2002.

Minimum Design Loads for Buildings and Other Structures, ASCE-7 2002, Structural Engineering Institute of the American Society of Civil Engineers, Reston, VA.

Mitigation Assessment Report: Hurricane Andrew Florida; FEMA FIA-22, June 2005.

NOAA Issues 2005 Atlantic Hurricane Season outlook; NOAA News @ noaa.gov, May, 2005.

Roof Damage Issues in Hurricanes; Haag Engineering Company, Timothy P Marshall, P.E.; 2455 S McIver Dr., Carrollton TX 75006.

Roof tiles Scarce, Soaring in price. Palm Beach Post, April 2006.

Tile Roof Assn. issues new guidelines after Hurricane findings; buildingonline.com/news/ October 2005.

Tile Roofing Institute Surveys Hurricane Charley Damage; Industry Association Aids in Damage Assessment and Provides Advice to Homeowner; Business Wire, August, 2004

Tile Roofing for High-Wind Areas; FEMA 499, Technical Fact Sheet No. 21, August 2005.

Appendix A

Acronyms and Useful Terminology

ASTM	American Society of Testing and Materials
BATTENS	Fastening strips installed to the underlayment or sub-roof on which the tiles are installed
DECK	Surface installed over the structural framing members to which roofing is applied
EAVE	Horizontal lower edge of a sloped roof
FEMA	Federal Emergency Management Agency
FLASHING	Materials used to prevent water infiltration at roof projections
FBC	Florida Building Code
HIGH PROFILE TILE	Tile having a rise to width ratio greater than 1:5
HVHZ	High Velocity Hurricane Zone as defined in the FBC
FOAM PADDY	Polyurethane foam adhesive mixture used to attach tile to underlayment
FRSA	Florida Roofing, Sheet Metal and Air Conditioning Contractors Association, Inc.
HEAD LAP	Distance between the lower edge of an overlapping tile and the upper edge of the lapped unit in the course immediately below
HIP	Inclined external angle formed by two sloping planes of the roof
MORTAR PADDY	Mortar mixture used to adhere a roof tile to the underlayment
NOAA	National Oceanic and Atmospheric Administration
RICOWI	Roofing Industry Committee on Weather Issues
RIDGE	Uppermost horizontal external angle formed by the intersection of two sloping planes of the roof.
TRI	Tile Roofing Institute
UNDERLAYMENT	Water shedding layers of roofing applied to a sloped roof prior to the installation of roof tiles

Appendix B

Installation Procedures

Following a series of studies, a new installation procedure was developed and released in October 2005 for tile roofs, as a supplement to the "Florida Roofing Sheet Metal and Air Conditioning Contractors Association and the Tile Roofing Institute (FRSA/TRI) for Concrete and Clay Roof Tile Installation Manual". The guidelines will be officially adopted by the Florida Building Code (FBC) effective November 1, 2006.

Each concrete and clay manufacturer has developed its own installation procedure, which is typically provided to the companies installing their tiles. Installation procedures in the FRSA/TRI manual apply to buildings with a mean roof height of 60' or less. The following sections discuss the installation procedures for the mechanically attached, adhesive-set, and mortar-set hip and ridge tile attachment systems.

I. Mechanically Attached Hip and Ridge Tile System

Mechanically fastened systems use tile fasteners such as nails or screws. The tiles are applied over the under-laymen with mechanical fasteners to the deck.

This method allows the installer to use three different options to attach the structural support; typically wood hip and ridge frame, to the substrate of the roof; metal brackets, metal straps, or FBC approved adhesive, as shown in Figure B. 1 through Figure B. 3.

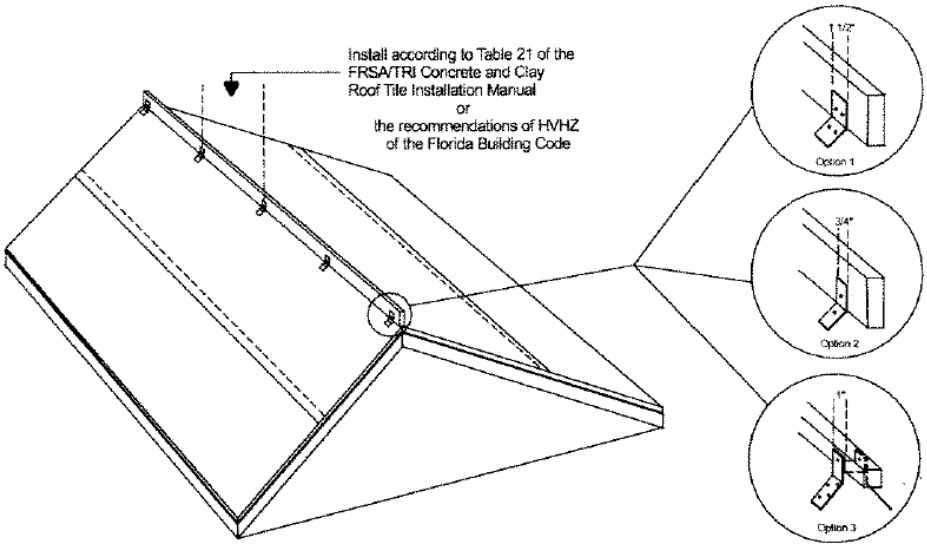

Figure B. 1: Metal Brackets

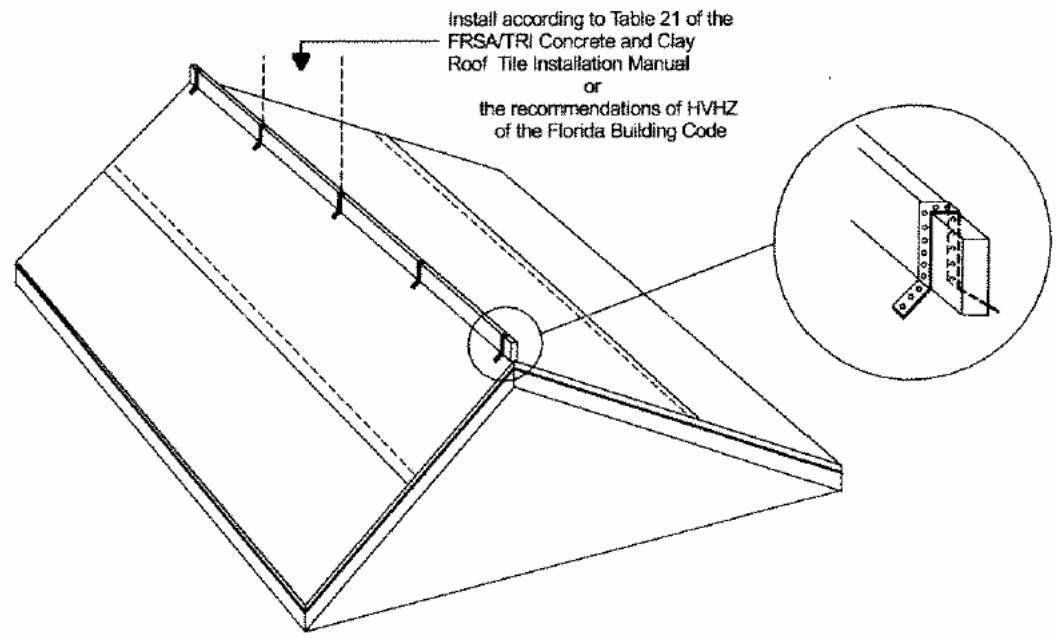

Figure B. 2: Metal Straps (Reproduced from FRSA /TRI 07320 /08-05)

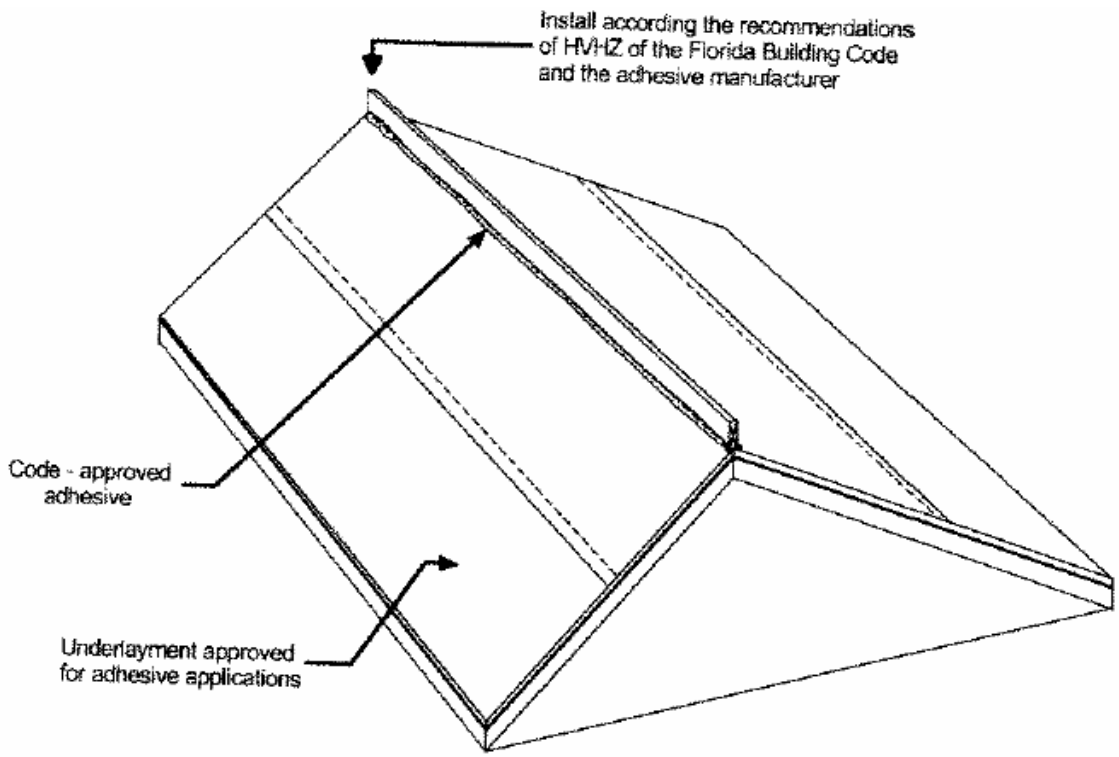

Figure B. 3: Code Approved Adhesive (Reproduced from FRSA /TRI 07320 /08-05)

Once the selection is made for the structural support, the attachment of the frame must follow the High Velocity Hurricane Zone (HVHZ) requirements of the FBC. After completion of the structural support attachment, the installer must choose the weather blocking method. Once again, the installer has three choices, as follows:

1. Foil-faced self-adhered membrane weather blocking system, which uses self-adhered membrane as a weather block. No mortar is used along the longitudinal edges of the tile. Mortar can be used at junctions (hip/valley, ridge/valley, etc) as a weather block. Care should be taken to ensure that the self-adhered membrane is sealed to the tile surface, mainly to prevent water intrusion especially in the junction areas as shown in Figure B. 4

2. FBC approved adhesive tested as a weather blocking system, in which adhesive is placed where the field tile abuts to the structural support. No mortar is placed along the edges of neither the hip nor the ridge tile. Adhesive is placed A bead of adhesive is placed parallel to the hip and/or ridge board tile junction to act as weather block and is applied prior the attachment of the hip and ridge tile. Adhesive is placed to seal all voids between the tile and the structural support according to the adhesive manufactures recommendations. Again, care should be taken to ensure that all areas are sealed with adhesive to prevent water intrusion (see Figure B. 5).

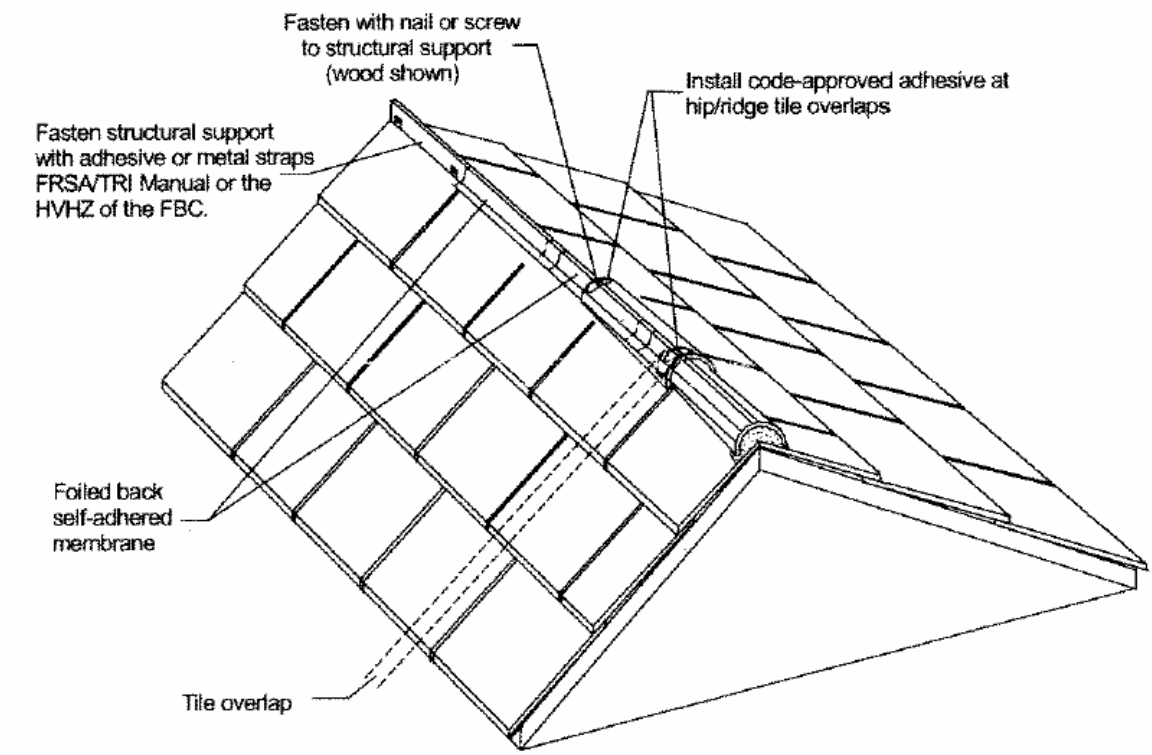

Figure B. 4: Foil-Faced Self-Adhered Membrane Weather Blocking System.

(Reproduced from FRSA /TRI 07320 /08-05)

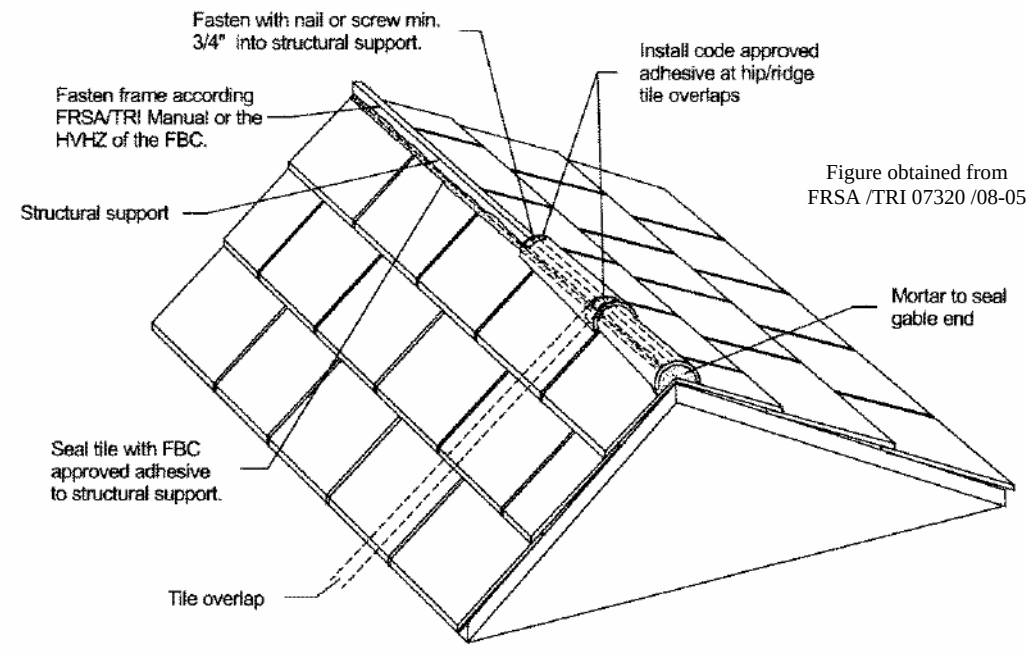

Figure obtained from FRSA /TRI 07320 /08-05

Figure B. 5: FBC Approved Adhesive Tested as a Weather Blocking System.

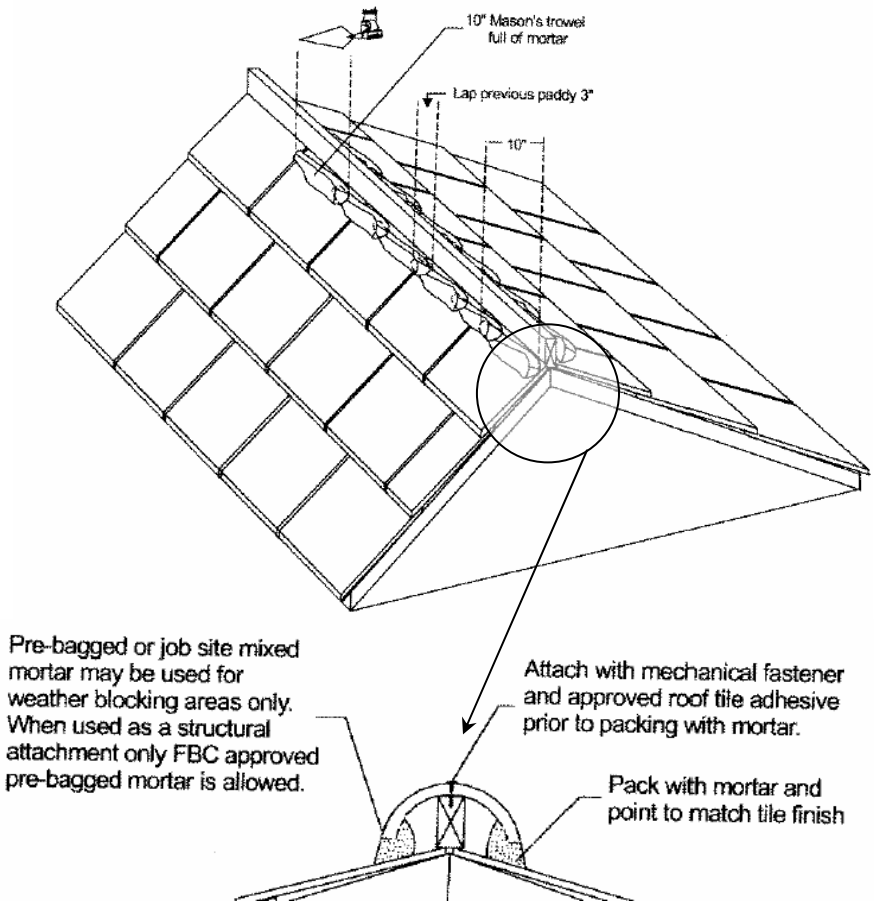

Figure B. 6: Mortar Hip/Ridge Weather Blocking System (Pre-bagged or Job-Site Mix).

(Reproduced from FRSA /TRI 07320 /08-05)

3. Mortar hip/ridge weather blocking system, which uses pre-bagged or job-site mixed mortar. Hip and/or ridge tile's edge must be packed with mortar to match tile finish line. Mortar's paddy must be sufficient to lap previous tile for a minimum of 3". In addition, tile shall be attached with mechanical fastener (see Figure B. 6).

II. Adhesive-Set Hip and Ridge Tile Attachment System

This method allows the installer to use the same option of structural supports used in the mechanically attached system but with the addition of metal hip and ridge frame (metal channel, see Figure B. 7).

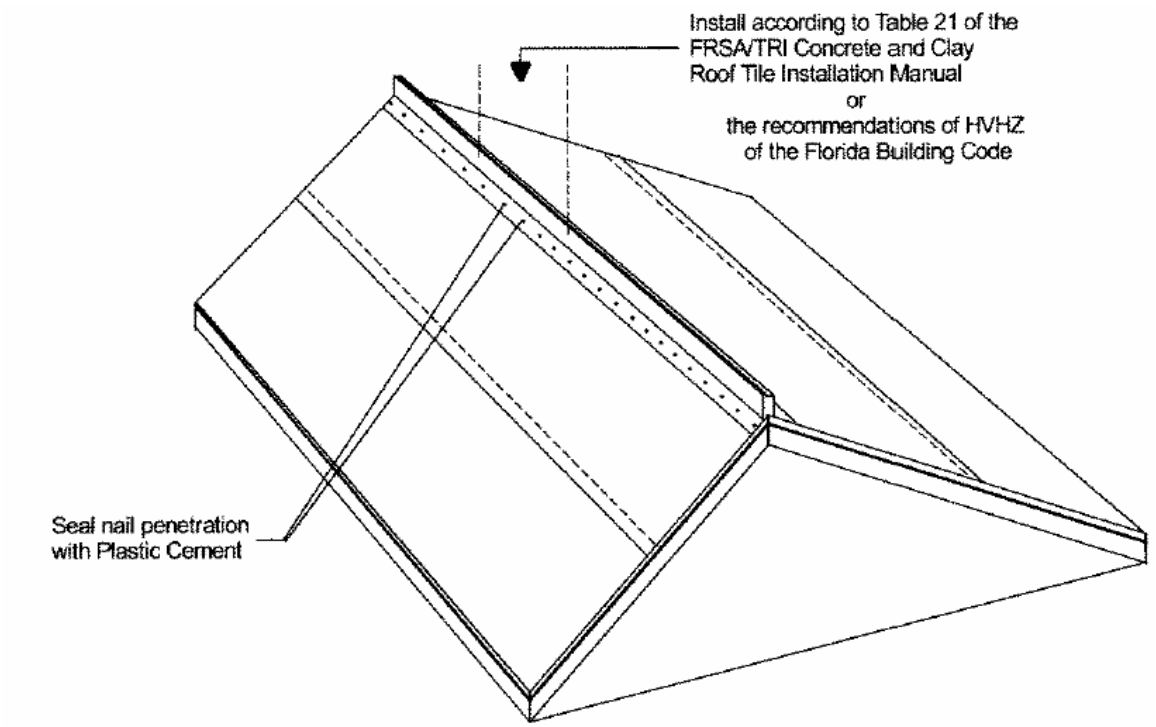

Figure B. 7: Metal Hip and Ridge Frame

(Reproduced from FRSA /TRI 07320 /08-05)

After either the metal or wood frame is selected, a determination shall be made on how to attach the frame to the substrate. The same methods as the mechanically attached system may be used. Again, once the selection is made for the structural support, the attachment of the frame must be according to the HVHZ requirements of the FBC. After completion of the structural support attachment the installer must choose the weather blocking method. In this system, only two methods are approved as weather blocking method;

1. FBC approved adhesive tested as a weather blocking system.

2. Mortar weather blocking system (pre-bagged or job-site mix)

Both weather blocking systems are installed using the same techniques as the mechanically attached system.

III. Mortar – Set Hip and Ridge Tile Attachment System.

This tile attachment system can only be installed with pre-bagged FBC approved mortar, tested to determine the limitations of the product application (Specifically according to Rule 9B-72). A full solid bed of mortar must be placed at the eave end of the hip or ridge starter tile and parallel to the hip and/or ridge structural support under where the longitudinal edge of the hip/ridge tile is to be placed (see Figure B. 8). The same method shall be performed starting from the lowest point and continuing to the highest of the roof. At intersections or junctions, the tile must be cut to create a solid fit to ensure that the first and last tiles are securely fastened.

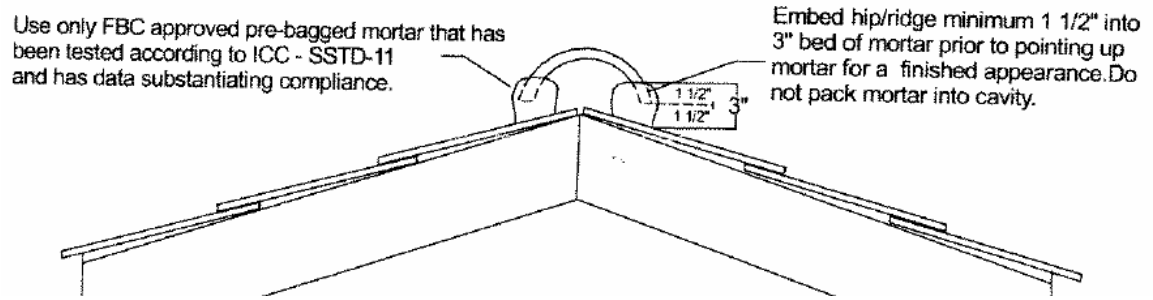

Figure B. 8: Tile's End Embedded Into Mortar
(Reproduced from FRSA /TRI 07320 /08-05)

As an option, the entire cavity of the hip and ridge tile may be filled with a bed of mortar in lieu of longitudinal bed placed parallel to the hip and ridge junctions (see Figure B. 9).

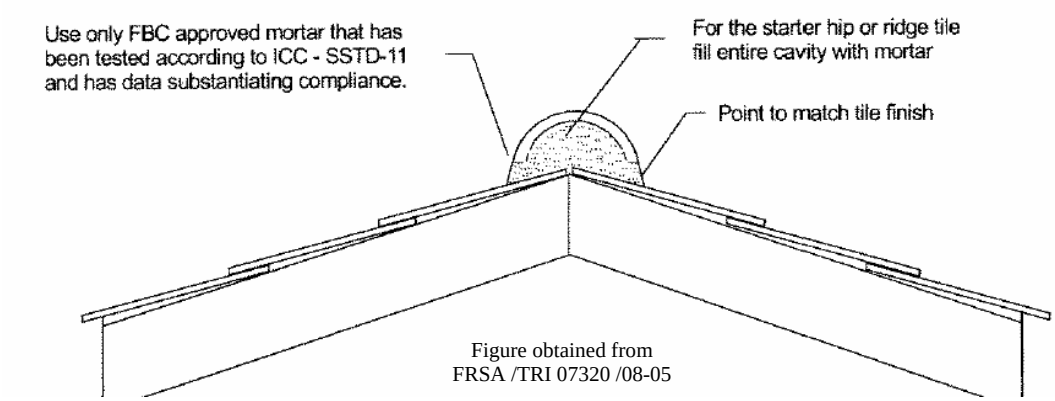

Figure B. 9: Tile Embedded Into Mortar

Testing Standards

Concrete and Clay tiles are subject to testing before they are allowed to be installed in Miami-Dade County. Each different type of tile (either Concrete or Clay) has its own set of test limits which must be passed in order to be installed. Each applicable test details the minimum number of samples and the equipment (apparatus) required for the test. The following standard test methods were identified:

1. **C 67 – 05 Standard Test Methods for Sampling and Testing Brick and Structural Clay Tile**

This test method covers procedures for the modulus of rupture, compressive strength, absorption, saturation coefficient, effect of freezing and thawing, efflorescence, initial rate of absorption and determination of weight, size, length change, and void area of clay tiles.

2. **C 140 – 05a Standard Test Methods for Sampling and Testing Concrete Masonry Units and Related Units**

This test method covers procedures for dimensions, compressive strength, absorption, unit weight (density), and moisture content of concrete masonry units.

3. **C 1167 – 03 Standard Specification for Clay Roof Tiles**

This method is an extension/modification of ASTM C 67 – 05 with additional specifications for durability and appearance as a weather resistance surface. The effect of weathering on tiles is related to the weathering index, which for any locality is the product of the average annual number of freezing cycle days and the average annual winter rainfall in inches. This method provides a map, which places the majority of the State of Florida with a severe weathering index of 50 (Negligible Weather Conditions).

4. **C 1492 – 03 Standard Specification for Concrete Roof Tiles**

The same as in the clay tiles, this standard covers concrete tiles intended for use as roof coverings where durability and appearance are required to provide a weather resistant surface. This method involves all concrete tiles fabricated with Portland Cement, Modified Portland Cement, Blended Cement, Pozzolans or Ground Granulated Blast Furnace Slag. This method should be used in conjunction with the ASTM C 140 – 05a and ASTM C 67 – 05. The required tests are Dimension Tolerances, Freeze Thaw, Transverse Strength, Permeability and Water absorption. The same weathering index explained for clay tiles applies to concrete tiles.

5. C 1568 – 05 Standard Test Method for Wind Resistance of Concrete and Clay Roof Tiles (Mechanical Uplift Resistance Method)

This method covers a procedure to determine the resistance of concrete and clay roof tiles as it refers to wind resistance of an air-permeable roof tile system. The procedures covered in this method are intended for the three installation procedures discussed earlier. The mechanical uplift resistance of the tile system that is measured by this system may not be able to simulate wind conditions with respect to intensity, duration, and turbulence.

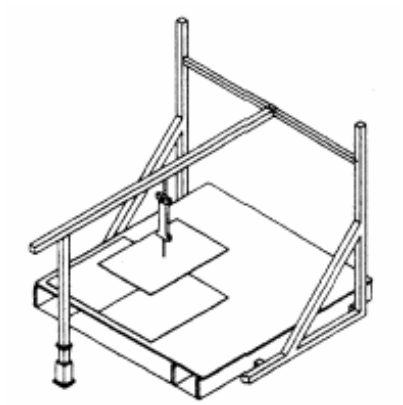

Figure B. 10: Mechanical Uplift Resistance Apparatus
(Reproduced from ASTM C 1568 -05)

The test apparatus for this method is detailed in . The frame must be made of "tubular steel of sufficient strength to remain rigid when loads of up to 500 lb are applied to the test tile."

The process begins by perforating an opening in the tile and placing a steel transfer plate into the tile. The test tile must be fixed using the approved installation procedures, and the system must be totally fixed preventing any movement. Deflections must be recorded using dial gages. When using clips or fasteners as attachments, additional gages are required to record their displacements.

6. C 1569 – 03 Standard Test Method for Wind Resistance of Concrete and Clay Roof Tiles (Wind Tunnel Method)

By means of historical testing, it has been determined that the natural effects of wind are very close to the ones simulated by the Wind Tunnel Method. This test method details steps to determine the effects of high velocity winds on concrete and clay tiles using a wind tunnel apparatus. The simulation should be for velocities ranging from 70 mph to 130 mph. The installation procedure used in this method is the one specified by the manufacturer.

7. **C 1570 – 03 Standard Test Method for Wind Resistance of Concrete and Clay Roof Tiles (Air Permeability Method)**

   This test method has a scope to determine the air resistance of a small section of a roof deck for either concrete or clay. This test is developed by determining the ability of the roof system to relieve uplift pressure resulting from the overall air permeability of the roof assembly as it relates to the resistance of the system to damages caused by wind forces. This relationship is obtained by applying air pressure underneath the system and verifying the air pressure on top of the system. The difference between the initial air flow and the air pressure across the system is used to determine the permeability of the system. The apparatus is constructed air tight as described in the method.

The following Testing Application Standards (TAS) are mainly testing procedures that have been incorporated by the Florida Building Code:

1. **TAS 100-95 Test Procedure for Wind and Wind Driven Rain Resistance of Discontinuous Roof Systems.**

2. **TAS 101-95 Test Procedure for Static Uplift Resistance of Mortar or Adhesive Set Tile Systems.**

3. **TAS 102-95 Test Procedure for Static Uplift Resistance of Mechanically Attached, Rigid Roof Systems.**

4. **TAS 102-95 A. Test Procedure for Static Uplift Resistance of Mechanically Attached, Clipped, Rigid Roof Systems.**

5. **TAS 112-95 Standard Requirements for Concrete Roof Tiles.**

6. **TAS 116-95 Test Procedure for Air Permeability Testing of Rigid, Discontinuous Roof Systems.**

Appendix C

Photographs of Static Uplift Resistance for Adhesive-Set

Clay # 1

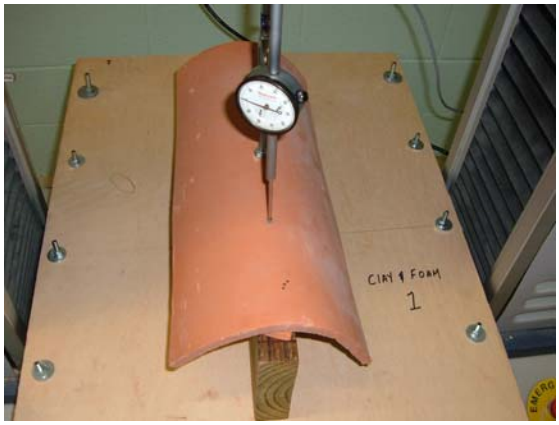
CLAY & FOAM
1


CLAY & FOAM
1
660 lbs
0.49 in

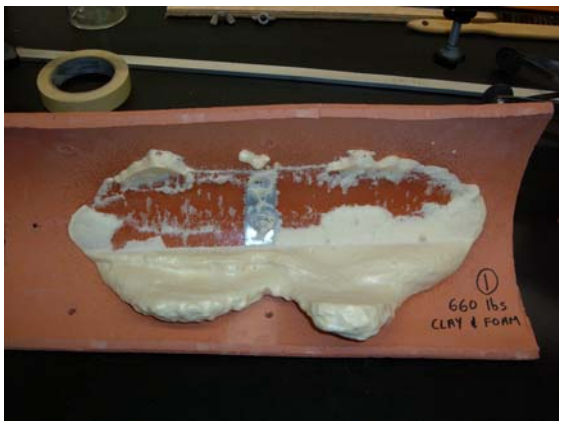
1
660 lbs
CLAY & FOAM

Clay # 2

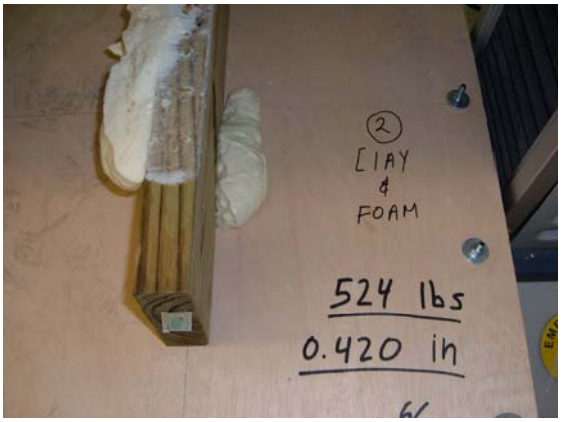
2
CLAY
&
FOAM
524 lbs
0.420 in

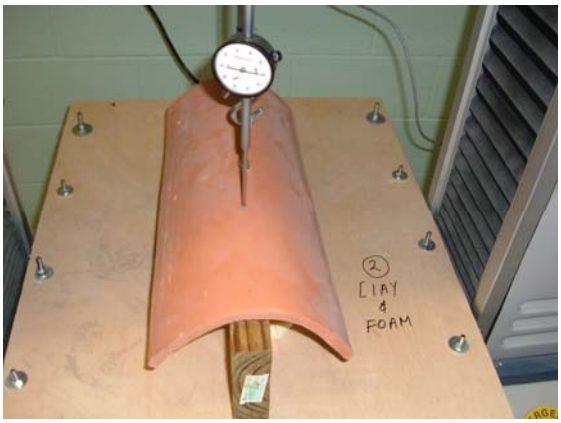
2
CLAY
&
FOAM


CLAY & FOAM
524
0.42 in
2

Clay # 3

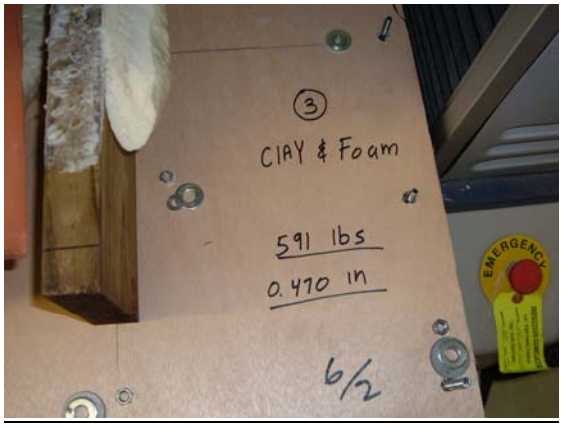
3
CLAY & Foam
591 lbs
0.470 in
6/2


3
CLAY & Foam


3
CLAY & FOAM
591 lbs

Clay # 4

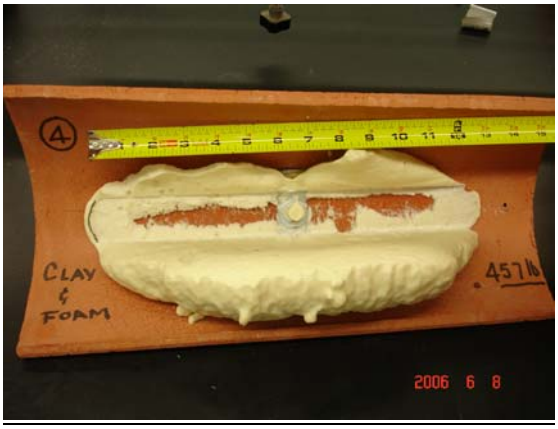
4
CLAY
&
FOAM
457 lb
2006 6 8


4
CLAY
&
Foam
457 lbs
2006 6 8

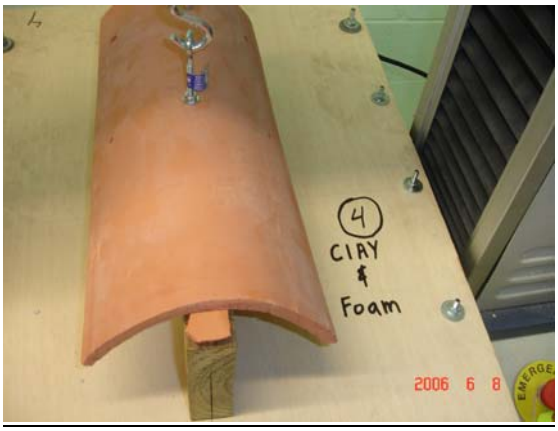
4
CLAY
&
Foam
2006 6 8

Clay # 5

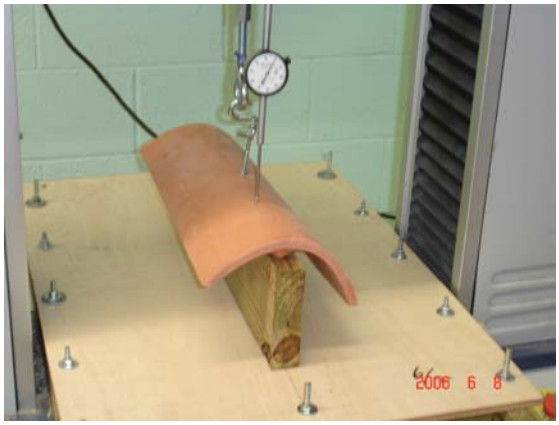

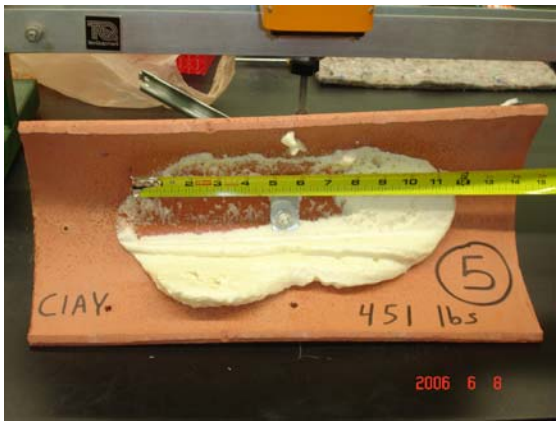

Concrete # 1

Concrete # 2

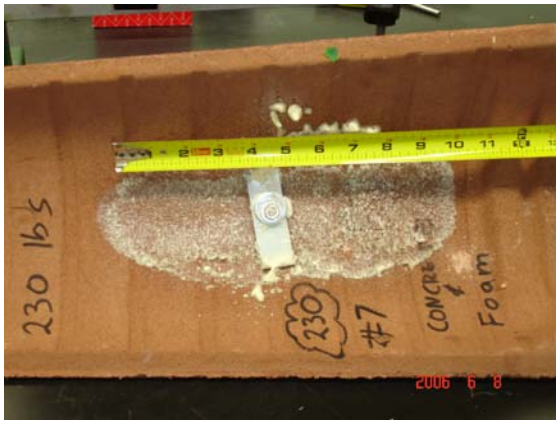

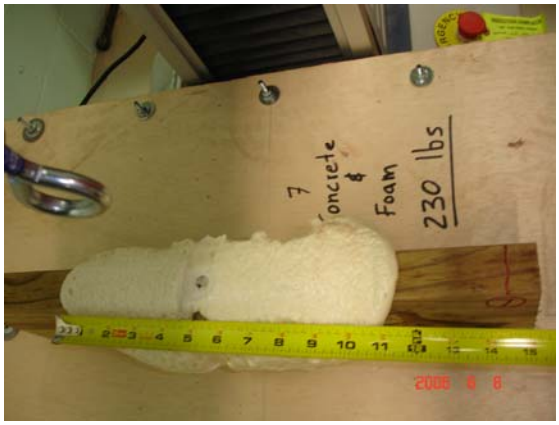

Concrete # 3

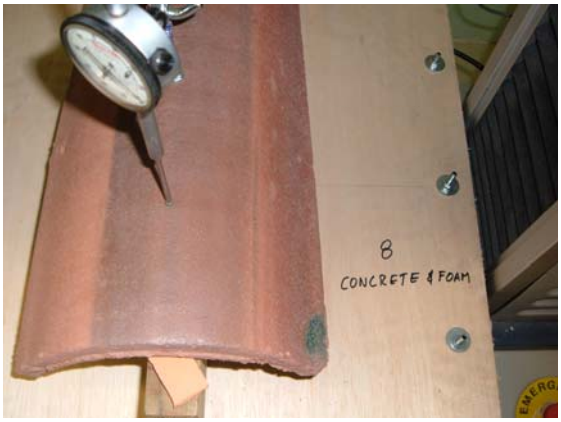

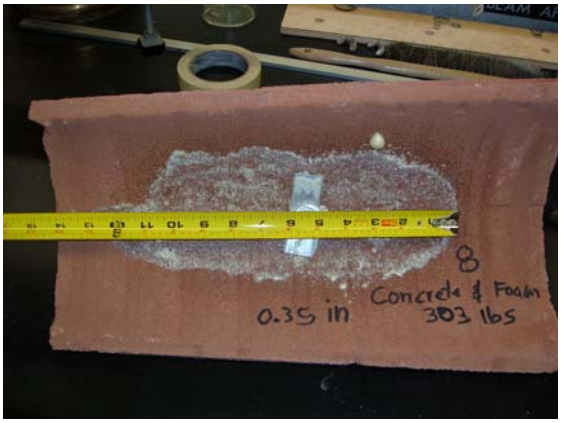

Concrete # 4

Concrete # 5

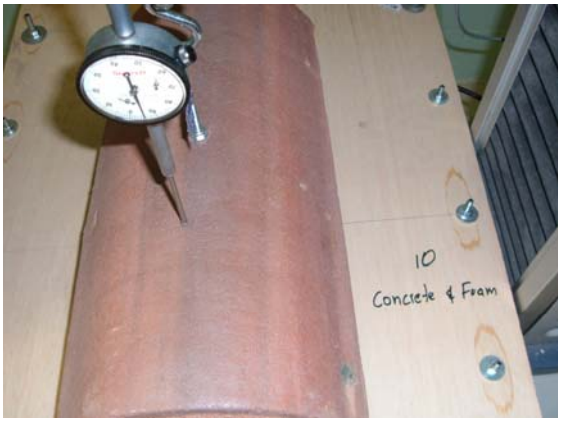

Appendix D

Photographs of Static Uplift Resistance Test for Mortar-Set

Clay # 1


CLAY
&
MORTAR
#1
152 lb
0.08 in
2006 6 12


CLAY
&
MORTAR
#1
152 lb
0.08 in


#1 152 lbs
CLAY & MORTAR
2006 6 12

Clay # 2


#2 CLAY & MORTAR
177 lb 0.110 in
2006 6 12


#2 CLAY & MORTAR
2006 6 12


#2 CLAY & MORTAR
2006 6 12

Clay # 3


#3 CLAY & MORTAR
204 lb
0.19 in

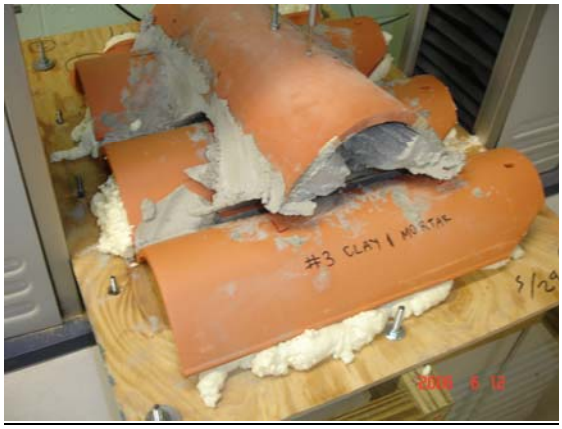
#3 CLAY & MORTAR


#3 CLAY & MORTAR

Clay # 4


#4 CLAY & MORTAR


#4 CLAY & MORTAR
140 lb
0.055 in


#4 CLAY & MORTAR

Clay # 5

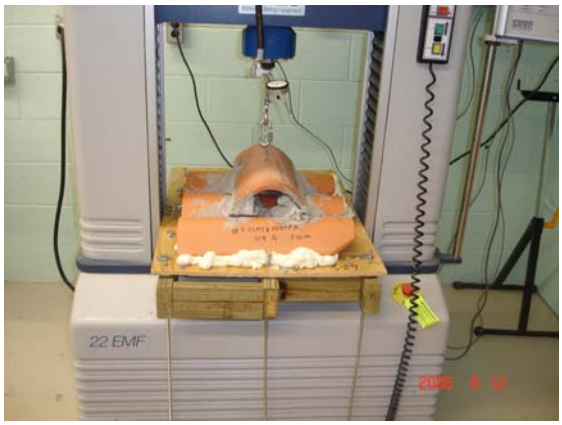

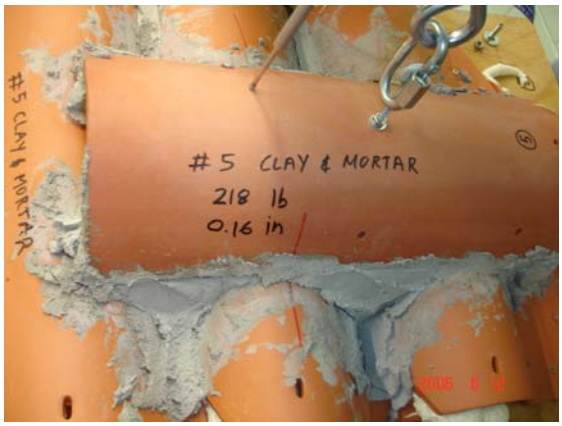

Concrete # 1

Concrete # 2

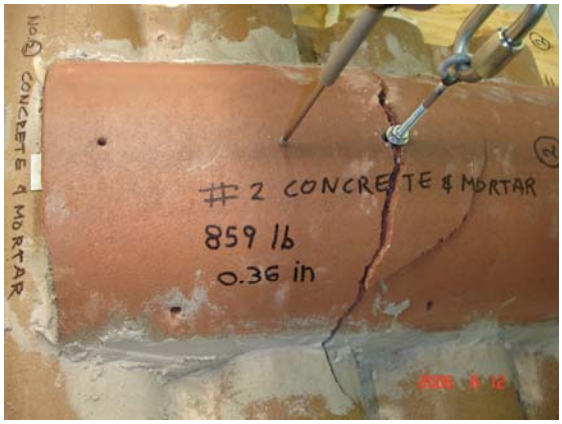

Concrete # 3

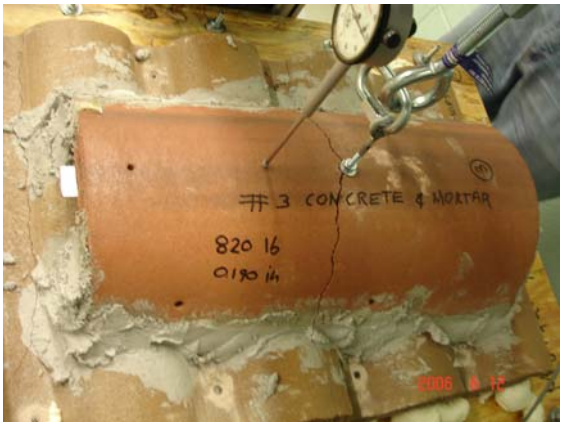

Concrete # 4

Concrete # 5

Appendix E

Sample Clay Tile
Notice of Acceptance

MIAMI-DADE

BUILDING CODE COMPLIANCE OFFICE (BCCO)
PRODUCT CONTROL DIVISION

MIAMI-DADE COUNTY, FLORIDA
METRO-DADE FLAGLER BUILDING
140 WEST FLAGLER STREET, SUITE 1603
MIAMI, FLORIDA 33130-1563
(305) 375-2901 FAX (305) 375-2908

NOTICE OF ACCEPTANCE (NOA)

Santafe Tile Corporation
8825 NW 95th Street
Medley, FL 33178

SCOPE:
This NOA is being issued under the applicable rules and regulations governing the use of construction materials. The documentation submitted has been reviewed by the BCCO and accepted by the Building Code and Product Review Committee to be used in Miami Dade County and other areas where allowed by the Authority Having Jurisdiction (AHJ).

This NOA shall not be valid after the expiration date stated below. The BCCO (In Miami Dade County) and/or the AHJ (in areas other than Miami Dade County) reserve the right to have this product or material tested for quality assurance purposes. If this product or material fails to perform in the accepted manner, the manufacturer will incur the expense of such testing and the AHJ may immediately revoke, modify, or suspend the use of such product or material within their jurisdiction. BCCO reserves the right to revoke this acceptance, if it is determined by BCCO that this product or material fails to meet the requirements of the applicable building code.

This product is approved as described herein, and has been designed to comply with the South Florida Building Code, 1994 Edition for Miami-Dade County or Florida Building Code.

DESCRIPTION: Mission Barrel "Roofing Tile"

RENEWAL of this NOA shall be considered after a renewal application has been filed and there has been no change in the applicable building code negatively affecting the performance of this product.

TERMINATION of this NOA will occur after the expiration date or if there has been a revision or change in the materials, use, and/or manufacture of the product or process. Misuse of this NOA as an endorsement of any product, for sales, advertising or any other purposes shall automatically terminate this NOA. Failure to comply with any section of this NOA shall be cause for termination and removal of NOA.

ADVERTISEMENT: The NOA number preceded by the words Miami-Dade County, Florida, and followed by the expiration date may be displayed in advertising literature. If any portion of the NOA is displayed, then it shall be done in its entirety.

INSPECTION: A copy of this entire NOA shall be provided to the user by the manufacturer or its distributors and shall be available for inspection at the job site at the request of the Building Official.

This NOA consists of pages 1 through 4.
The submitted documentation was reviewed by Frank Zuloaga, RRC

PRODUCT CONTROL ACCEPTED

NOA No.: 02-0903.02
Expiration Date: 10/13/07
Approval Date: 10//03/02
Page 1 of 4

ROOFING SYSTEM APPROVAL:

Category: Roofing
Sub-Category: Roofing Tiles
Material: Clay

1. SCOPE

This renews a roofing system using Santafe 'Mission Barrell', as manufactured Santafe Tile Corporation described in Section 2 of this Notice of Acceptance. For locations where the pressure requirements, as determined by applicable Building code does not exceed the values listed in Section 4 herein. The attachment calculations shall be done as an uplift based system.

2. PRODUCT DESCRIPTION

Manufactured by Applicant	Dimensions	Test Specifications	Product Description
Mission Barrel Clay Roof Tile	l = 18-¼" w = 8-½ to 7-½" taper ½" thick	TAS 112	High profile, two piece, clay roof tile equipped with one nail holes. For nail-on with clip, mortar set and adhesive set applications.
Trim Pieces	Length: varies Width: varies Varying thickness	TAS 112	Accessory trim, clay roof pieces for use at hips, rakes, ridges and valley terminations. Manufactured for each tile profile.

2.1 COMPONENTS OR PRODUCTS MANUFACTURED BY OTHERS

Product	Dimensions	Test Specifications	Product Description	Manufacturer
Tile Nails	min. 12d x 3¼"	PA 114 Appendix E	Corrosion resistant, ring shank nails.	generic
Roof Tile Mortar ("TileTite™")	N/A	PA 123	Prepared mortar mix designed for mortar set roof tile applications.	Bermuda Roof Company, Inc. with current PCA
Roof Tile Adhesive ("Polypro® AH160")	N/A	See PCA	Two component polyurethane adhesive designed for adhesive set roof tile applications.	Polyfoam Products, Inc. with current PCA

Hurricane Clip & Fasteners	Clips min. ½" width min. 0.060" thick Clip Fasteners min. 12d x 3¼"	TAS 114 Appendix E	Corrosion resistant bronze, aluminum, stainless steel or galvanized steel attachment clips for all nail-on tile attachment. Clips are installed with corrosion resistant roofing nails compatible with the clip.	generic

3. LIMITATIONS

3.1 Fire classification is not part of this acceptance.

3.2 For mortar or adhesive set tile applications, a static field uplift test in accordance with RAS 106 may be required, refer to applicable building code.

3.3 Applicant shall retain the services of a Miami-Dade county Certified Laboratory to perform quarterly tests in accordance with TAS 112, appendix 'A'. Such testing shall be submitted to the Building Code Compliance Office for review.

3.4 Minimum underlayment shall be in compliance with the applicable Roofing Application Standard listed section 4.1 herein.

3.5 30/90 hot mopped underlayment applications may be installed perpendicular to the roof slope unless stated otherwise by the underlayment material manufacturers published literature.

3.6 This acceptance is for wood deck applications. Minimum deck requirements shall be in compliance with applicable building code.

4. INSTALLATION

4.1 Santafe 'Mission Barrel' and its components shall be installed in strict compliance with Miami Dade County Roofing Application Standard RAS 118, RAS 119, and RAS 120.

4.2 Data For Attachment Calculations

Table 1: Average Weight (W) and Dimensions (l x w)			
Tile Profile	**Weight-W (lbf)**	**Length - l (feet)**	**Width-w (feet)**
Mission Barrel Clay Roof Tile	5.50	1.50	0.69

Table 2: Minimum Characteristic Resistance Load - F' (lbf)		
Tile Profile	**Tile Application**	**Minimum Characteristic Resistance Load (lbf)**
Mission Barrel Clay Roof Tile	Nail-on With A Clip System	32.60
	Mortar Set	76.60
	Adhesive Set	240

1. The nail hole shall be located at the center of the cover tile, 1-1/2" from the head.
2. Minimum 3" headlap.

5. LABELING

All tiles shall bear the imprint or identifiable marking of the manufacturer's name or logo, or following statement: "Miami-Dade County Product Control Approved".

6. BUILDING PERMIT REQUIREMENTS

6.1 Application for building permit shall be accompanied by copies of the following:

6.1.1 This Notice of Acceptance.

6.1.2 Any other documents required by the Building Official or applicable Building Code in order to properly evaluate the installation of this system.

PROFILE DRAWING

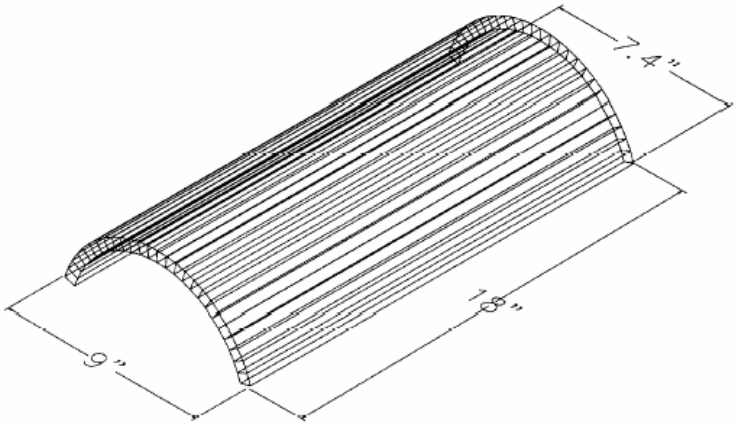

SANTAFÉ "MISSION BARREL" CLAY ROOF TILE

END OF THIS ACCEPTANCE

Appendix F

Sample Concrete Tile
Notice of Acceptance

MIAMI-DADE

BUILDING CODE COMPLIANCE OFFICE (BCCO)
PRODUCT CONTROL DIVISION

MIAMI-DADE COUNTY, FLORIDA
METRO-DADE FLAGLER BUILDING
140 WEST FLAGLER STREET, SUITE 1603
MIAMI, FLORIDA 33130-1563
(305) 375-2901 FAX (305) 375-2908

NOTICE OF ACCEPTANCE (NOA)

Monier Lifetile, LLC
135 NW 20th Street
Boca Raton, FL 33431

SCOPE:

This NOA is being issued under the applicable rules and regulations governing the use of construction materials. The documentation submitted has been reviewed by Miami-Dade County Product Control Division and accepted by the Board of Rules and Appeals (BORA) to be used in Miami Dade County and other areas where allowed by the Authority Having Jurisdiction (AHJ).

This NOA shall not be valid after the expiration date stated below. The Miami-Dade County Product Control Division (In Miami Dade County) and/or the AHJ (in areas other than Miami Dade County) reserve the right to have this product or material tested for quality assurance purposes. If this product or material fails to perform in the accepted manner, the manufacturer will incur the expense of such testing and the AHJ may immediately revoke, modify, or suspend the use of such product or material within their jurisdiction. BORA reserves the right to revoke this acceptance, if it is determined by Miami-Dade County Product Control Division that this product or material fails to meet the requirements of the applicable building code.

This product is approved as described herein, and has been designed to comply with the High Velocity Hurricane Zone of the Florida Building Code.

DESCRIPTION: Mission Barrel Concrete Roof Tile

LABELING: Each unit shall bear a permanent label with the manufacturer's name or logo, city, state and following statement: "Miami-Dade County Product Control Approved", unless otherwise noted herein.

RENEWAL of this NOA shall be considered after a renewal application has been filed and there has been no change in the applicable building code negatively affecting the performance of this product.

TERMINATION of this NOA will occur after the expiration date or if there has been a revision or change in the materials, use, and/or manufacture of the product or process. Misuse of this NOA as an endorsement of any product, for sales, advertising or any other purposes shall automatically terminate this NOA. Failure to comply with any section of this NOA shall be cause for termination and removal of NOA.

ADVERTISEMENT: The NOA number preceded by the words Miami-Dade County, Florida, and followed by the expiration date may be displayed in advertising literature. If any portion of the NOA is displayed, then it shall be done in its entirety.

INSPECTION: A copy of this entire NOA shall be provided to the user by the manufacturer or its distributors and shall be available for inspection at the job site at the request of the Building Official.

This NOA consists of pages 1 through 4.
The submitted documentation was reviewed by Frank Zuloaga, RRC

PRODUCT CONTROL ACCEPTED

NOA No.: 02-1211.07
Expiration Date: 12/16/07
Approval Date: 01/08/03
Page 1 of 4

ROOFING ASSEMBLY APPROVAL

Category: Roofing

Sub-Category: High Profile Roofing Tiles
Material: Concrete

1. SCOPE

This renews a system using Monier Lifetile Mission Barrel Concrete Roof Tile, as manufactured Monier Lifetile LLC and described in Section 2 of this Notice of Acceptance. For locations where the pressure requirements, as determined by applicable Building Code does not exceed the design pressure values obtained by calculations in compliance with RAS 127 using the values listed in section 4 herein. The attachment calculations shall be done as a moment based system.

2. PRODUCT DESCRIPTION

Manufactured by Applicant	Dimensions	Test Specifications	Product Description
Monier Lifetile Mission Barrel Tile	l = 18" w = Varies Varying thickness	ASTM C 1167	High profile, two-piece, extruded concrete roof tile. For mortar set or adhesive set applications.
Trim Pieces	l = varies w = varies varying thickness	ASTM C 1167	Accessory trim, concrete roof pieces for use at hips, rakes, ridges and valley terminations. Manufactured for each tile profile.

2.1 SUBMITTED EVIDENCE:

Test Agency	Test Identifier	Test Name/Report	Date
The Center for Applied Engineering, Inc.	94-084	Static Uplift Testing PA 101 (Mortar Set)	May 1994
The Center for Applied Engineering, Inc.	94-083	Static Uplift Testing PA 101 (Adhesive Set)	April 1994
Redland Technologies	P0647-01	Wind Tunnel Testing PA 108 (Mortar Set)	Aug. 1994
Professional Service Industries, Inc.	224-47099	Physical Properties PA 112	Sept, 1994
Celotex Corporation	520191-2-1	Static Uplift Testing	March 1999
Testing Services	520111-3	PA 101	Dec. 1998
Walker Engineering, Inc.	Calculations	Aerodynamic Multiplier	March 1999
Walker Engineering, Inc.	Calculations	25-7183	March 1995
Walker Engineering, Inc.	Calculations	25-7094	February 1996
Walker Engineering, Inc.	Calculations	25-7496	April 1996
Walker Engineering, Inc.	Calculations	Aerodynamic Multipliers Two Patty Adhesive Set System	April 1999

Test Agency	Test Identifier	Test Name/Report	Date
Walker Engineering, Inc.	Calculations	25-7584 25-7804b-8 25-7804-4 & 5 25-7848-6	December 1996

3. LIMITATIONS

3.1 Fire classification is not part of this acceptance.

3.2 For mortar or adhesive set tile applications, a static field uplift test shall be performed in accordance with RAS 106.

3.3 Applicant shall retain the services of a Miami-Dade County Certified Laboratory to perform quarterly test in accordance with TAS 112, appendix 'A'. Such testing shall be submitted to the Building Code Compliance Office for review.

3.4 Minimum underlayment shall be in compliance with the applicable Roofing Applications Standards listed section 4.1 herein.

3.5 30/90 hot mopped underlayment applications may be installed perpendicular to the roof slope unless stated otherwise by the underlayment material manufacturers published literature.

3.6 This acceptance is for wood deck applications. Minimum deck requirements shall be in compliance with applicable building code.

4. INSTALLATION

4.1 Monier Lifetile Mission Barrel Concrete Roof Tile and its components shall be installed in strict compliance with Roofing Application Standard RAS 118, RAS 119, and RAS 120.

4.2 Data For Attachment Calculations

Table 1: Average Weight (W) and Dimensions (l x w)

Tile Profile	Weight-W (lbf)	Length-l (ft)	Width-w (ft)
Monier Lifetile Mission Barrel Tile	8.3	0.83	0.708

Table 2: Aerodynamic Multipliers - λ (ft^3)

Tile Profile	λ (ft^3) Direct Deck Application
Monier Lifetile Mission Barrel Tile	0.31

Table 3: Restoring Moments due to Gravity - M_g (ft-lbf)

Tile Profile	3":12"	4":12"	5":12"	6":12"	7":12" or greater
Monier Lifetile Mission Barrel Tile	5.47	5.39	5.27	5.14	5.00

Table 4: Attachment Resistance Expressed as a Moment - M_f (ft-lbf) for Single Patty Adhesive Set Systems		
Tile Profile	**Tile Application**	**Minimum Attachment Resistance**
Monier Lifetile Mission Barrel Tile	Polyfoam PolyPro™	133 (Concrete tile)[5]
	Flexible TileBond	84 (Concrete tile)[6]
5 Place 23 grams per pan and 23 grams per cap of PolyPro™.		
6 Place 11.8 grams per pan and 11.6 grams per cap of TileBond.		

Table 4A: Attachment Resistance Expressed as a Moment - M_f (ft-lbf) for Mortar Set Systems		
Tile Profile	**Tile Application**	**Attachment Resistance**
Monier Lifetile Mission Barrel Tile	Mortar Set[1]	24.5

5. LABELING

All tiles shall bear the imprint or identifiable marking of the manufacturer's name or logo, or following statement: "Miami-Dade County Product Control Approved".

6. BUILDING PERMIT REQUIREMENTS

6.1 Application for building permit shall be accompanied by copies of the following:

6.1.1 This Notice of Acceptance.

6.1.2 Any other documents required by the Building Official or applicable building code in order to properly evaluate the installation of this system.

PROFILE DRAWINGS

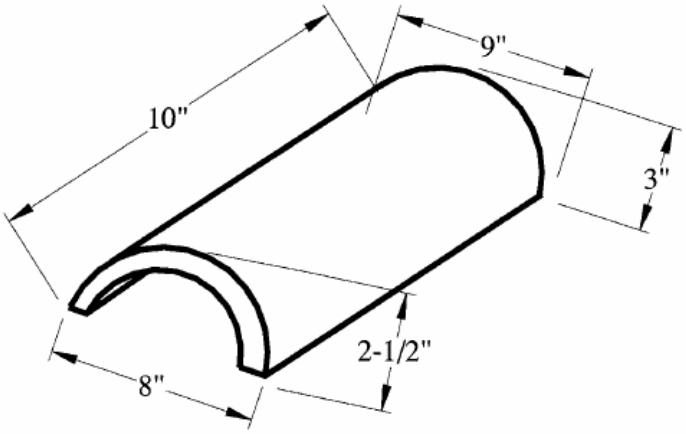

MONIER LIFETILE MISSION BARREL CONCRETE ROOF TILE

END OF THIS ACCEPTANCE

Appendix G

Sample Adhesive-Set Notice of Acceptance

ROOFING ASSEMBLY APPROVAL:

Category: Roofing
Sub Category: 07320 Roof tile adhesive
Materials: Polyurethane

1.SCOPE

This approves **Polyset ® One** as described in Section 2 of this Notice of Acceptance, designed to comply with the South Florida Building Code, Edition for Miami-Dade County. For the locations where the pressure requirements, as determined by applicable building code, do not exceed the design pressure values; as obtained by calculations in compliance with RAS 127, using **Polyset ® One**, and where the attachment calculations shall be done as an moment based system.

2. PRODUCT DESCRIPTION

Manufactured by Applicant	Dimensions	Product Description
Polyset One	Factory premixed canisters	Single component polyurethane foam roof tile adhesive

2.1 Components or products manufactured by others:

Any Miami-Dade County Product Control Accepted Roof Tile Assembly having a current NOA which list moment resistance values with the use of **Polyset ® One** roof tile adhesive.

2.2 Typical Physical Properties:

Property	Test	Results
Density	ASTM D 1622	1.95 lbs./ft.^{3}□
Compressive Strength	ASTM D 1621	7.8 psi
Tensile Strength	ASTM D 1623	19.95 PSI Parallel to rise□
Water Absorption	ASTM D 2842	4.22 Lbs./Ft^2□
Moisture Vapor Transmission□	ASTM E 96	3.5 Perm / Inch
Dimensional Stability	ASTM D 2126	+0.89% Volume Change @ 70° C., 2 weeks
Closed Cell Content	ASTM D 2856	72.14%□

3. LIMITATIONS

3.1 Fire classification is not part of this acceptance.

3.2 **Polyset ® One** can be used with flat, low, high tile profiles.

3.3 Minimum underlayment shall be in compliance with the Roofing Application Standard RAS 120.

3.4 Roof Tile manufactures acquiring acceptance for the use of **Polyset ® One** roof tile adhesive with their tile assemblies shall test in accordance with RAS 101 with section 10.4 as modified herein.

3.5

$$F' = \frac{\left(\frac{F}{2}\right) - W}{MS}$$

4. INSTALLATION

4.1 **Polyset One** may be used with any roof tile assembly having a current NOA that lists moment resistance values with the use of **Polyset ® One**

4.2 **Polyset ® One** shall be applied in compliance with the Component Application section and the corresponding Placement Details noted herein. The roof tile assembly's adhesive attachment with the use of **Polyset ® One** shall provide sufficient attachment resistance, expressed as an moment based system, to meet or exceed the moment resistance determined in compliance with Roofing Application Standards RAS 127. The adhesive attachment data is noted in the roof tile assembly NOA

4.3 **Polyset ® One** roof tile adhesive and its components shall be installed in accordance with Roofing Application Standard RAS 120, and Polyfoam Products, Inc. **Polyset ® One** Operating Instruction and Maintenance Booklet

4.4 Installation must be by a Factory Trained 'Qualified Applicator' approved and licensed by Polyfoam Products, Inc.

4.5 Tiles must be adhered in freshly applied adhesive. Tile must be set within **4** minutes after **Polyset ® One** has been dispensed.
Polyset ® One placement shall be in accordance with the 'Placement Details' herein. Each generic tile profile requires the specific placement noted herein.

Table 1: Adhesive Placement For Each Generic Tile Profile

Tile Profile	Typical Placement Detail	Weight per paddy (grams)
Flat, Low & High Profile	# 1	6.5
High Profile 2-Piece Barrel	# 2	8.7

5. LABELING

5.1 All **Polyset ® One** containers shall comply with the Standard Conditions listed herein.

6. BUILDING PERMIT REQUIREMENTS

6.1 As required by the Building Official or applicable building code in order to properly evaluate the installation of this system.

Adhesive Placement Details

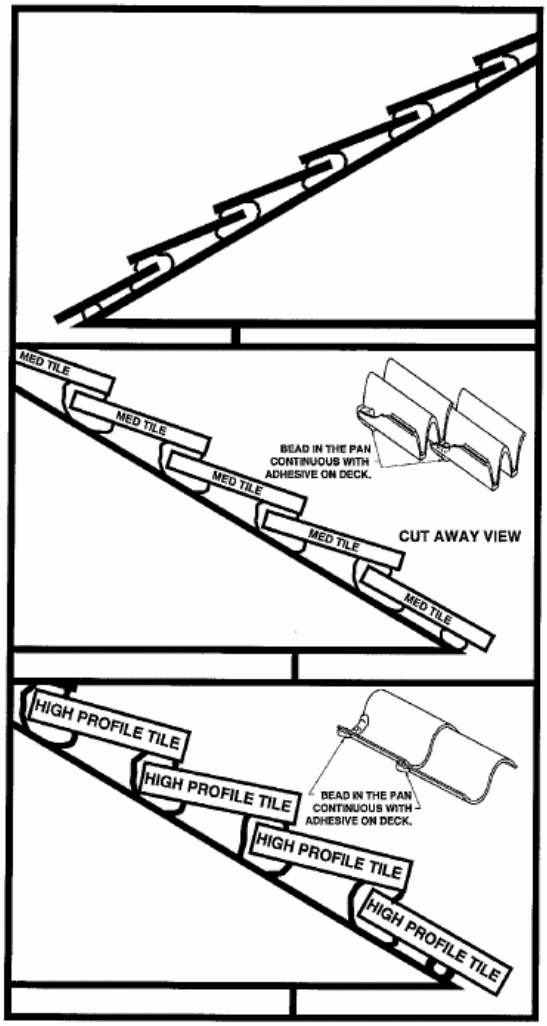

PLACEMENT DETAIL # 1

ADHESIVE PLACEMENT DETAILS
(CONTINUED)

PLACEMENT DETAIL # 2

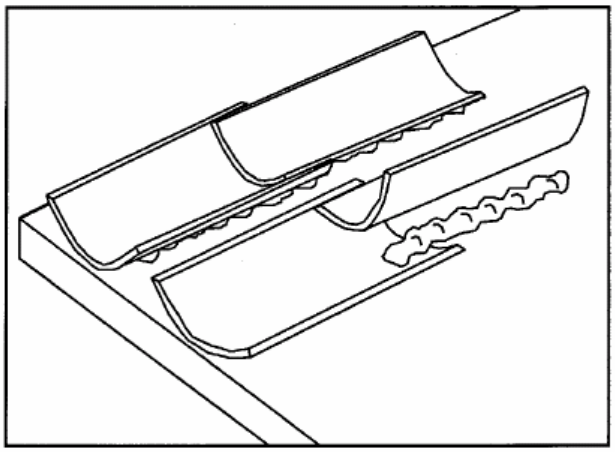

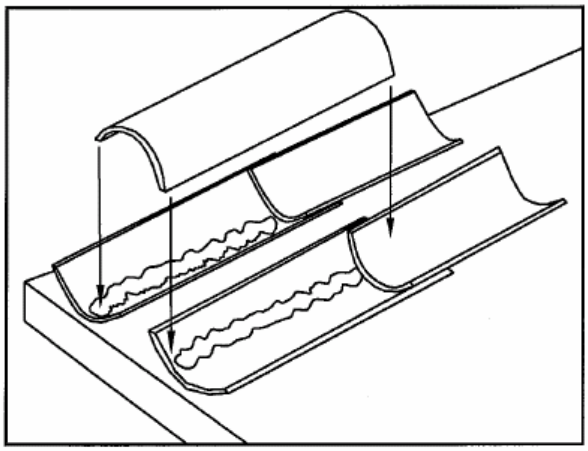

END OF THIS ACCEPTANCE

Appendix H

Field Reconnaissance Report

After obtaining results from the laboratory testing, a field reconnaissance was conducted in the southwest neighborhood of Miami-Dade County, specifically SW 152 Ave from SW 8th Street to SW 24th Street. The section west of SW 152 Ave mostly included clay tiles while east of SW 152 Ave had concrete tiles. The main reason for selecting this area was the fairly new construction; most of these houses are between one and two years old. The photographs in this section show the majority of the damages in the hip and ridge clay tiles attached with mortar.

Figure H. 1: Clay Tiles Displaced

Figure H. 1 through Figure H. 9 show damages to clay tiles with mortar bed. In most cases the tile was lifted and displaced from its mortar bed. The most common failure mode, observed in the field, was between the hip or ridge tile and the mortar; contrary to the lab tests, where the failure mode was between the mortar and the field tile. This difference between lab and field failures may indicate that the field installation may not have the minimum mortar amount required by the FBC.

Figure H. 2: Entire Hip Zone Tiles Displaced

Figure H. 3: Displacement of a single Clay Tile

Figure H. 4: Hip Zone Damage

Figure H. 5: Close-up of Hip Zone

Figure H. 6: Hip Zone Tiles Missing

Figure H. 7: Hip Zone Tiles Displaced

Figure H. 8: Hip Tile Damaged

Figure H. 9: Hip and Ridge Tiles Missing

In the visit from Polyfoam, a recommendation was made that the adhesive foam should not be exposed to the sun. The photographs below show that during installation the foam used in the critical regions such as the perimeter and the corner get some exposure to sun reducing their bonding capacity. Also, in some instances little or no foam is present on the tile. (see Figure H. 10 through Figure H. 12)

Figure H. 10: Exposure of Foam to Sun

Figure H. 11: Insufficient Foam at Installation

Figure H. 12: Inadequate Foam Installation